SUBMITTAL PACKAGE

2500 DQKAN

Date: 10/30/23 Rev _0

Serving Cummins Customers

Cummins power solutions are supported by the largest and best-trained worldwide-certified sales/distributor network in the industry. This network will help you select and install the critical power solution to meet the requirements of your specific application. This same network provides experts with advanced technology to make your life easier while providing a seamless support experience.

IMPORTANT: *The critical power solution information and specifications included in this pdf can be used by the site contractor(s) and/or engineer(s) to assist with planning for and accomplishing the overall power solution installation. Please forward this document to the appropriate personnel, as necessary.*

It is the obligation of the electrical contractor and reviewing engineer to determine that the item quantities and accuracy of this submittal is correct as required for the job. Any inaccuracies or deviations must be addressed with Cummins Inc. before release to manufacturing. Any releases of material to manufacturing by the above parties constitute an acceptance of the accuracy of the submittal. Any changes after release will be viewed as a change order, subject to pricing changes. Please take the time to review this package for accuracy to prevent any after-shipment problems that could cause delay in energization.

Cummins certifies that these drawings, material lists, specification and datasheets have been checked prior to submittal and they:

- *accurately depict the proposed equipment*
- *provide current information to the date of the submittal and*
- *present true and accurate equipment information.*

This Approval Drawing Package is submitted as our interpretation of the project requirements and/or the specifications for this job. Please note that issuance of these submittals shall not be deemed or interpreted as performance nor acceptance of your purchase order terms and conditions.

For questions or comments regarding this submittal, please contact the Cummins Project Manager listed on the title page.

Sales and Service

TABLE OF CONTENTS

Section 1 - Project Information
Project Bill of Material

Section 2 - GENERATOR SPEC SHEETS

Generator Specification Sheet	NAS-5918-EN
Generator Data Sheet	NAD-5919-EN
PowerCommand Control (PCC) Specification Sheet	S-1570
Alternator Data Sheet	ADS-531
Cooling System Data Sheet	MCP-269
Sound Data Sheet	MSP-1189
Exhaust Emission Data Sheet	EDS-1153
EPA Complaince Statement	EPA-1223
Prototype Data Sheet	PTS-315

Section 3 - GENERATOR ACCESSORIES

Battery Charger Specification Sheet	NAAC-5602-EN

Section 4 - GENERATOR DRAWINGS

Global enclosure/tank full submittal	Global full submittal
Generator Outline Drawing	A054H274
Fuel Filter Drawing	A055Y798
Coolant Heater Drawing	A046E742
Generator PCC3.3 Wiring Diagrams	A054B158

Section 5 - STARTUP &WARRANTY

Pre-Start up checklist	
Generator Training Agenda	Gen training
Generator Warranty Statement	A028U870

SECTION 1
PROJECT INFORMATION

Sales and Service

October 16, 2023

Bill of Material

Feature Code	Description	Qty
DQKAN	DQKAN, Diesel Genset, 60Hz, 2500kW-Standby Rating	2
Install-US-Stat	U.S. EPA, Stationary Emergency Application	
2500DQKAN	2500DQKAN, Diesel Genset, 60Hz, 2500kW	
A331-2	Duty Rating - Standby Power (ESP)	
L170-2	Emission Certification, EPA, Tier 2, NSPS CI Stationary Emergency	
L090-2	Listing - UL 2200	
R002-2	Voltage - 277/480, 3 Phase, Wye, 4 Wire	
B600-2	Alternator - 60Hz, 3Phase, 480 Volt, 105C - Standby	
A416-2	Alternator Heater, 110/220 (120/240) Volt AC	
B225-2	Stator Winding Temperature Sensors, 2 RTD per Phase	
C127-2	Fuel Water Separator	
H609-2	Control Mounting - Left Facing	
H704-2	PowerCommand 3.3 Controller, Paralleling Capable	
H606-2	Analog Meters - AC Output	
H678-2	LCD Control Display	
H720-2	AmpSentryTM UL Listed Protective Relay	
K020-2	Display, Running Time	
KA08-2	Alarm - Audible, Engine Shutdown	
H536-2	Control Display Language - English	
F258-2	Terminal Housing - Alternator Mounted, Bottom Entry, LV, NEMA 2 - Hole Connectors	
H710-2	Indication - Ground Fault, 3 - Pole Transfer Switch, Remote Mounted CT, RS	
C278-2	Fuel Filters - Engine, Duplex	
A334-2	Engine Starter - 24 Volt DC Motor	
D041-2	Engine Air Cleaner - Normal Duty	
A333-2	Battery Charging Alternator	
E125-2	Engine Cooling - Radiator, High Ambient Air Temperature, Ship Fitted	
H389-2	Shutdown - Low Coolant Level	
H557-2	Coolant Heater - 208/240/480 Volts AC, Below 40F Ambient Temperature	
H110-2	Oil Pan - High Capacity	
H607-2	Engine Oil Filters, Full Flow with Bypass	
H734-2	Oil Sampling Valve	
L028-2	Genset Warranty - 2 Years Base	
L050-2	Literature - English	
A358-2	Packing - None	
A048G602	Battery Charger-10Amp, 120/208/240VAC, 12/24V, 50/60Hz	2
0416-0527	Battery Rack-Holddown Assembly Included	8
NSBOP01	OV-6000 Global Generator Sound Attenuated Level II Enclosure	2
NSBOP02	OV-6000 Global UL142 Subbase Fuel tank - 24 hours	2
A055Y798	FILTER,FUEL	2

NOTES:

Proposal is for equipment only, offloading, rigging, and installation by others.
Fuel and permits, unless listed above, is not included.
Cummins Standard Start-up and testing is included. Additional tests, such as NETA testing, if required, is by others
Coordination Study not provided.

SECTION 2
GENERATOR SPECIFICATIONS

Specification sheet

Diesel generator set QSK60 series engine

2500 kW 60 Hz

Emergency Standby

EPA emissions

Description

Cummins® commercial generator sets are fully integrated power generation systems providing optimum performance, reliability, and versatility for stationary Standby applications.

Features

Cummins heavy-duty engine - Rugged 4-cycle, industrial diesel delivers reliable power, low emissions and fast response to load changes.

Alternator - Offers selectable motor starting capability with low reactance 2/3 pitch windings, low waveform distortion with non-linear loads and fault clearing short-circuit capability.

Permanent Magnet Generator (PMG) - Offers enhanced motor starting and fault clearing short-circuit capability.

Control system - The PowerCommand® digital control is standard equipment and provides total genset system integration including automatic remote starting/stopping, precise frequency and voltage regulation, alarm and status message display, AmpSentry™ protective relay, output metering, auto-shutdown at fault detection and NFPA 110 Level 1 compliance.

Cooling system - Standard integral set-mounted radiator systems, designed and tested for rated ambient temperatures, simplifies facility design requirements for rejected heat.

NFPA - The generator set accepts full rated load in a single step in accordance with NFPA 110 for Level 1 systems.

Warranty and service - Backed by a comprehensive warranty and worldwide distributor network.

	Standby rating	Prime Rating	Emissions compliance	Data sheets
Model	60 Hz kW (kVA)	60 Hz kW (kVA)	EPA	60 Hz
DQKAN	2500 (3125)	2250 (2813)	EPA Tier 2	NAD-5919

©2019 Cummins Inc. | NAS-5918-EN (12/22)

Generator set specifications

Performance class	Genset models have been tested in accordance with ISO 8528-5. Consult factory for transient performance information.
Voltage regulation, no load to full load	± 0.5%
Random voltage variation	± 0.5%
Frequency regulation	Isochronous
Random frequency variation	± 0.25%
Electromagnet Compatibility Performance	Emissions to EN 61000-6-2:2005 Immunity to EN 61000-6-4:2007+A1:2011

Engine specifications

Bore	158.8 mm (6.25 in)
Stroke	190 mm (7.48 in)
Displacement	60.2 liters (3673 in^3)
Configuration	Cast iron, V 16 cylinder
Battery capacity	2200 amps minimum at ambient temperature of 0 °C (32 °F)
Battery charging alternator	55 amps
Starting voltage	24 volt, negative ground
Fuel system	Cummins' modular common rail system
Fuel filter	Two-stage spin-on fuel filters and water separator system. Stage 1 has a three element, 5-micron filter and Stage 2 has a three element, 3-micron filter (EleMax™ NanoNet™).
Air cleaner type	Dry replaceable element
Lube oil filter type(s)	Four spin-on, combination full flow filter and bypass filters
Standard cooling system	High ambient cooling system

Alternator specifications

Design	Brushless, 4 pole, drip proof, revolving field
Stator	2/3 pitch
Rotor	Two bearing, flexible disc
Insulation system	Class H on low and medium voltage, Class F on high voltage
Standard temperature rise	80 ºC Standby
Exciter type	Permanent Magnet Generator (PMG)
Phase rotation	A (U), B (V), C (W)
Alternator cooling	Direct drive centrifugal blower fan
AC waveform Total Harmonic Distortion (THDV)	< 5% no load to full linear load, < 3% for any single harmonic

Available voltages

60 Hz Line – Neutral/Line – Line

- 220/380
- 277/480
- 240/416
- 255/440
- 347/600
- 2400/4160
- 7200/12470
- 7620/13200
- 7970/13800

Note: Consult factory for other voltages.

Generator set options and accessories

Engine

- 120/240 V 300 W anti-condensation heater
- 208/240/480 V thermo-statically controlled coolant heater for ambient above and below 4.5 °C (40 °F)
- Duplex fuel filter

Alternator

- 80 °C rise
- 105 °C rise
- 125 °C rise
- 150 °C rise
- 163 °C rise

Control panel

- PowerCommand 3.3
- Multiple language support
- 120/240 V 100 W control anti-condensation heater
- Exhaust pyrometer
- Ground fault indication
- Remote annunciator panel
- Paralleling relay package
- Shutdown alarm relay package
- Audible engine shutdown alarm
- AC output analog meters (bargraph)
- Display running time

©2019 Cummins Inc. | NAS-5918-EN (12/22)

Generator set options and accessories (continued)

Exhaust system

- Industrial grade exhaust silencer
- Residential grade exhaust silencer
- Critical grade exhaust silencer

Cooling system

- Standard high ambient temperature (43 °C)

Generator set

- PowerCommand 550 remote monitoring system
- Batteries
- Battery charger
- Bottom entry chute
- IBC and HCAI certification
- LV and MV/HV entrance box
- Manual language – English, Spanish and French
- Spring isolators
- 2 year warranty
- 5 year warranty
- 10 year major components warranty

PowerCommand 3.3 – control system

An integrated microprocessor based generator set control system providing voltage regulation, engine protection, alternator protection, operator interface and isochronous governing. Refer to document S-1570 for more detailed information on the control.

AmpSentry – Includes integral AmpSentry protection, which provides a full range of alternator protection functions that are matched to the alternator provided.

Power management – Control function provides battery monitoring and testing features and smart starting control system.

Advanced control methodology – Three phase sensing, full wave rectified voltage regulation, with a PWM output for stable operation with all load types.

Communications interface – Control comes standard with PCCNet and Modbus interface.

Service - InPower™ PC-based service tool available for detailed diagnostics, setup, data logging and fault simulation.

Easily upgradeable – PowerCommand controls are designed with common control interfaces.

Reliable design – The control system is designed for reliable operation in harsh environment.

Multi-language support

Operator panel features

Operator/display functions

- Displays paralleling breaker status
- Provides direct control of the paralleling breaker
- 320 x 240 pixels graphic LED backlight LCD
- Auto, manual, start, stop, fault reset and lamp test/panel lamp switches
- Alpha-numeric display with pushbuttons
- LED lamps indicating genset running, remote start, not in auto, common shutdown, common warning, manual run mode, auto mode and stop

Paralleling control functions

- First Start Sensor™ system selects first genset to close to bus
- Phase lock loop synchronizer with voltage matching
- Sync check relay
- Isochronous kW and kVar load sharing
- Load govern control for utility paralleling
- Extended paralleling (Base Load/Peak Shave) mode
- Digital power transfer control, for use with a breaker pair to provide open transition, closed transition, ramping closed transition, peaking and base load functions.

Alternator data

- Line-to-Neutral and Line-to-Line AC volts
- 3-phase AC current
- Frequency
- kW, kVar, power factor kVA (three phase and total)

Engine data

- DC voltage
- Engine speed
- Lube oil pressure and temperature
- Coolant temperature
- Comprehensive FAE data (where applicable)

Other data

- Genset model data
- Start attempts, starts, running hours, kW hours
- Load profile (operating hours at % load in 5% increments)
- Fault history
- Data logging and fault simulation (requires InPower)

Standard control functions

Digital governing

- Integrated digital electronic isochronous governor
- Temperature dynamic governing

Digital voltage regulation

- Integrated digital electronic voltage regulator
- 3-phase, 4-wire Line-to-Line sensing
- Configurable torque matching

AmpSentry AC protection

- AmpSentry protective relay
- Over current and short circuit shutdown
- Over current warning
- Single and three phase fault regulation
- Over and under voltage shutdown
- Over and under frequency shutdown
- Overload warning with alarm contact
- Reverse power and reverse Var shutdown
- Field overload shutdown

©2019 Cummins Inc. | NAS-5918-EN (12/22)

Standard control functions (continued)

Engine protection

- Battery voltage monitoring, protection and testing
- Overspeed shutdown
- Low oil pressure warning and shutdown
- High coolant temperature warning and shutdown
- Low coolant level warning or shutdown
- Low coolant temperature warning
- Fail to start (overcrank) shutdown
- Fail to crank shutdown
- Cranking lockout
- Sensor failure indication
- Low fuel level warning or shutdown
- Fuel-in-rupture-basin warning or shutdown
- Full authority electronic engine protection

Control functions

- Time delay start and cool down
- Real time clock for fault and event time stamping
- Exerciser clock and time of day start/stop
- Data logging
- Cycle cranking
- Load shed
- Configurable inputs and outputs (4)
- Remote emergency stop

Options

- Auxiliary output relays (2)

Emergency Standby Power (ESP):

Applicable for supplying power continuously to varying electrical loads for the duration of power interruption of a reliable utility source. Emergency Standby Power (ESP) is in accordance with ISO 8528 and ISO 3046-1, obtained and corrected in accordance with ISO 15550).

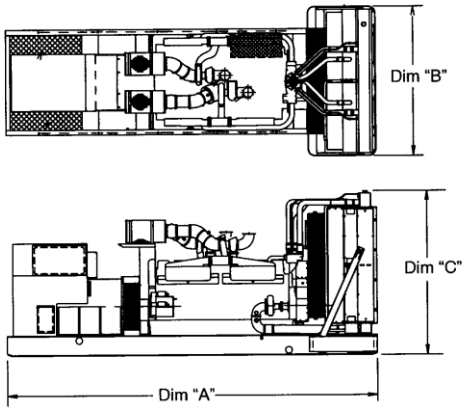

This outline drawing is for reference only. See respective model data sheet for specific model outline drawing number.

Do not use for installation design

Model	Dim "A" mm (in.)	Dim " mm (i		Set weight* wet kg (lbs)
DQKAN	7101 (280)	2635 (		23299 (51366)

Refer to drawings for specific weights and dimensions

* Weights represent a set with standard features. See outline drawings for weights of other configurations.

©2019 Cummins Inc. | NAS-5918-EN (12/22)

Codes and standards

Codes may not be available with all model configurations – consult factory for availability.

ISO 9001 **ISO 14001** **ISO 45001**	This product was manufactured in a facility whose quality management system is certified to ISO 9001 and its Health Safety Environmental Management Systems certified to ISO 14001 and ISO 45001.	UL LISTED	This product is listed to UL 2200, Stationary Engine Generator Assemblies.
PTS	The Prototype Test Support (PTS) program verifies the performance integrity of the generator set design. Cummins products bearing the PTS symbol meet the prototype test requirements of NFPA 110 for Level 1 systems.	**U.S. EPA**	Engine certified to Stationary Emergency U.S. EPA New Source Performance Standards, 40 CFR 60 subpart IIII Tier 2 exhaust emission levels. U.S. applications must be applied per this EPA regulation.
CSA	All genset models are available as CSA certified to CSA C22.2 No.100.	**International Building Code**	The generator set package is available certified for seismic application in accordance with International Building Code.

For more information contact your local Cummins distributor or visit power.cummins.com

Our energy working for you.™

©2019 Cummins Inc. All rights reserved. Cummins is a registered trademark of Cummins Inc. PowerCommand, AmpSentry, InPower and "Our energy working for you." are trademarks of Cummins Inc. Other company, product, or service names may be trademarks or service marks of others. Specifications are subject to change without notice.
NAS-5918-EN (12/22)

Generator Set Data Sheet

Model:	**DQKAN**
Frequency:	**60 Hz**
Fuel Type:	**Diesel**
kW Rating:	**2500 Standby** **2250 Prime**
Emissions Level:	**EPA NSPS Stationary Emergency Tier 2**

Exhaust emission data sheet:	**EDS-1153**
Exhaust emission compliance sheet:	**EPA-1223**
Sound performance data sheet:	**MSP-1189**
Cooling performance data sheet:	**MCP-269**
Prototype test summary data sheet:	**PTS-315**
Standard set-mounted radiator cooling outline:	**A054H274**

Fuel Consumption

	kW (kVA)			
Ratings	2500 (3125) †			
Load	**1/4**	**1/2**	**3/4**	**Full**
US gph	50.6	91.1	133.6	173.1
L/hr	191.5	344.9	505.7	655.3

†DCC available at standby power subject to Cummins' site-specific assessment. Please contact your Cummins Distributor.

Engine

Engine manufacturer	Cummins Inc.
Engine model	QSK60-G19 NR2
Configuration	Cast iron, V 16 cylinder
Aspiration	Turbocharged and low temperature after-cooled
Gross engine power output, kWm (bhp)	2715 (3640)
BMEP at set rated load, kPa (psi)	3007 (436)
Bore, mm (in.)	159 (6.25)
Stroke, mm (in.)	190 (7.48)
Rated speed, rpm	1800
Piston speed, m/s (ft/min)	11.4 (2243)
Compression ratio	14.5:1
Lube oil capacity, L (qt)	378 (400)
Overspeed limit, rpm	2070
Regenerative power, kW	207

Fuel Flow

Maximum fuel flow, L/hr (US gph)	1105 (292)
Maximum fuel inlet restriction, clean/dirty, kPa (in Hg)	16.9 (5) / 30 (9)
Maximum fuel inlet temperature, °C (°F)	71 (160)

©2019 Cummins Inc. | NAD-5919-EN PD00000134 (01/23)

Air

Combustion air, m^3/min (scfm)	193 (6829)
Maximum air cleaner restriction, clean/dirty, kPa (in H_2O)	1.3 (7) / 5.3 (20.6)
Alternator cooling air, m^3/min (cfm)	222 (7840)

Exhaust

Exhaust flow at set rated load, m^3/min (cfm)	517 (18269)
Exhaust temperature, °C (°F)	551 (1022)
Maximum back pressure, kPa (in H_2O)	7.4 (30)

Standard Set-Mounted Radiator Cooling

Ambient design, °C (°F)	48 (118)
Fan load, kW_m (HP)	54 (72)
Coolant capacity (with radiator), L (US gal)	681.4 (180)
Cooling system air flow, m^3/min (scfm)	2649 (93550)
Total heat rejection, MJ/min (Btu/min)	88.4 (83894)
Maximum cooling air flow static restriction, kPa (in H_2O)	0.12 (0.5)

Weights[1]

Unit dry weight kgs	50457)
Unit wet weight kgs	51366)

Refer to drawings for specific weights and dimensions

[1] Weights represent a set with standard features. See outline drawing for weights of other configurations.

Derating Factors

Full rated power available up to 300 m (1000 ft.) at ambient temperature up to 43 °C (110 °F). Above these elevations, derate at 5% per 300 m (1000 ft.) and 12% per 10 °C (18 °F).

Ratings Definitions

Emergency Standby Power (ESP): Applicable for supplying power continuously to varying electrical loads for the duration of power interruption of a reliable utility source. Emergency Standby Power (ESP) is in accordance with ISO 8528 and ISO 3046-1, obtained and corrected in accordance with ISO 15550).

©2019 Cummins Inc. | NAD-5919-EN PD00000134 (01/23)

Alternator Data

Voltage	Connection[1]	Temp rise degree C[2]	Duty	Max surge kVA[4]	Winding No.	Alternator data sheet	Feature code
480	3 Ph Wye	125	S	8412	12	ADS-516	B246
380	3 Ph Wye	105	S	13024	13	ADS-531	B408
13200	3 Ph Wye	105	S	11213	91	ADS-533	B501
12470	3 Ph Wye	105	S	11213	91	ADS-533	B568
380	3 Ph Wye	125	S	7944	13	ADS-516	B598
480	3 Ph Wye	105	S	9719	12	ADS-517	B600
480	3 Ph Wye	80	S	13024	12	ADS-531	B601
600	3 Ph Wye	125	S	8189	7	ADS-516	B602
600	3 Ph Wye	80	S	12426	7	ADS-531	B604
4160	3 Ph Wye	80	S	11185	51	ADS-545	B605
12470	3 Ph Wye	80	S	13438	91	ADS-534	B607
13800	3 Ph Wye	80	S	11213	91	ADS-533	B610
440	3 Ph Wye	105	S	13024	12	ADS-531	B664
416	3 Ph Wye	150	S	9719	12	ADS-517	B682
440	3 Ph Wye	80	S	14781	12	ADS-532	B688
416	3 Ph Wye	105	S	13283	12	ADS-531	B715
416	3 Ph Wye	80	S	14781	12	ADS-532	B734
13200	3 Ph Wye	80	S	13438	91	ADS-534	B807
440	3 Ph Wye	150	S	8412	12	ADS-516	B813
480	3 Ph Wye	80	S	14781	12	ADS-532	B903
600	3 Ph Wye	80	S	14781	7	ADS-532	B904
4160	3 Ph Wye	80	S	15662	51	ADS-587	B905
13800	3 Ph Wye	80	S	13438	91	ADS-534	B909
4160	3 Ph Wye	150	S	8752	51	ADS-520	BB77
13800	3 Ph Wye	105	S	7993	91	ADS-523	BC24
13200	3 Ph Wye	125	S	7993	91	ADS-523	BC25

Notes:

[1] Limited single-phase capability is available from some three phase rated configurations. To obtain single phase rating, multiply the three-phase kW rating by the Single Phase Factor[2]. All single-phase ratings are at unity power factor.

[2] Also capable of 105/125/150 °C temp rise.

[3] Factor for the *Single-Phase Output from Three Phase Alternator* formula listed below.

[4] Maximum rated starting kVA that results in a minimum of 90% of rated sustained voltage during starting.

Formulas for Calculating Full Load Currents:

Three phase output

$$\frac{\text{kW} \times 1000}{\text{Voltage} \times 1.73 \times 0.8}$$

Single phase output

$$\frac{\text{kW} \times \text{SinglePhaseFactor} \times 1000}{\text{Voltage}}$$

For more information contact your local Cummins distributor or visit power.cummins.com

Our energy working for you.™

©2019 Cummins Inc. All rights reserved. Cummins is a registered trademark of Cummins Inc. PowerCommand, AmpSentry, InPower and "Our energy working for you." are trademarks of Cummins Inc. Other company, product, or service names may be trademarks or service marks of others. Specifications are subject to change without notice.
NAD-5919-EN PD00000134 (01/23)

Specification Sheet

PowerCommand® 3.3 Generator Set Digital Integrated Control System

Bargraph Optional

Introduction

The PowerCommand® 3.3 control system is a microprocessor-based generator set monitoring, metering, and control system, which is comprised of PowerCommand® Control 3300 and the Human Machine Interface 320. PCC3300 supports multiple operation modes including:

- Standalone,
- Synchronization only,
- Isolated bus paralleling,
- Utility single generator set paralleling,
- Utility multiple generator set paralleling,
- Utility single generator set paralleling with power transfer control (automatic mains failure),
- Isolated bus paralleling with Masterless Load Demand

PowerCommand® Control 3300 is designed to meet the exacting demands of the harsh and diverse environments of today's typical power generation applications for Full Authority Electronic or Hydromechanical engine power generator sets.

Offering enhanced reliability and performance over more conventional generator set controls via the integration of all generator control functions into a single system, PCC3300 is your Power of One generator set control solution.

Benefits and Features

- 320 x 240 pixels graphical LED backlit LCD
- Multiple languages supported
- AmpSentry™ protection provides industry-leading generator overcurrent protection
- Digital Power Transfer Control (Automatic Mains Failure) provides load transfer operation in open transition, closed transition, or soft (ramping) transfer modes
- Extended Paralleling (Peak Shave/Base Load) regulates the genset real and reactive power output while paralleled to the utility. Power can be regulated at either the genset or utility bus monitoring point
- Digital frequency synchronization and voltage matching
- Isochronous Load Sharing
- Droop kW and kVAr control
- Real time clock for fault and event time stamping
- Exerciser clock and time of day start/stop initiate a test with or without load, or a Base Load or Peak Shave session
- Digital automatic voltage regulation is provided using three phase sensing and full wave FET type regulator, which is compatible with either shunt or PMG excited systems with a standard AUX103 AVR or an option for a more powerful high-current field drive capability AUX106 AVR
- Digital engine speed governing is provided on applicable platforms
- Generator set monitoring (including metering) and protection with PCC3300 measuring voltage, current, kW and kVAr offering a measurement accuracy of 1%
- Utility / AC Bus metering and protection with PCC3300 voltage, current, kW and kVAr offering a measurement accuracy of 1%
- 12 V (DC) and 24 V (DC) battery operation
- RS-485 Modbus® interface for interconnecting to customer equipment
- Warranty and service – Cummins Power Generation offers a comprehensive warranty and worldwide distributor service network
- Global regulatory certification and compliance: PCC3300 is suitable for use on gensets that are designed, manufactured, tested and certified to relevant UL, NFPA, ISO, IEC, Mil Std., UKCA, and CE standards

©2022 Cummins Inc.

PowerCommand® Generator Set Digital Control System PCC 3300

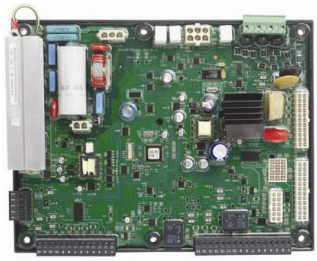

Introduction

PCC3300 is an industry-leading digital generator set control suitable for usage on a wide range of diesel and lean burn natural gas generator sets in both standalone as well as paralleling applications.

PowerCommand® is compatible with either shunt or PMG excitation, and is suitable for usage with reconnectable or non-reconnectable generators. Configuration for any frequency, voltage and power connection from 120 V (AC) to 600 V (AC) line-to-line or 601 V (AC) to 45k V (AC) with an external PT is supported. The PCC3300 derives its own power from the generator set starting batteries and functions over a voltage range of 8 V (DC) to 30 V (DC).

Features

- PCC3300 supports configurable control features via software download using InPower PC-compatible software
- 12 V (DC) and 24 V (DC) battery operation
- Digital automatic voltage regulation is provided using three phase sensing and full wave FET type regulator, which is compatible with either shunt or PMG excited systems with a standard AUX103 AVR or an option for a more powerful high-current field drive capability AUX106 AVR
- Digital engine speed governing on applicable platform is provided, which is capable of providing isochronous frequency regulation
- Full authority J1939 CANBus® prime mover communications and control is provided for platforms with an Engine Control Module (ECM)
- AmpSentry" protection provides industry-leading alternator overcurrent protection:
  - Time-based generator protection applicable to both line-to-line and line-to-neutral, that can detect an unbalanced fault condition and swiftly react appropriately. Balanced faults can also be detected by AmpSentry and appropriate acted upon.
  - Reduces the risk of Arc Flash due to thermal overload or electrical faults by inverse time protection
- Generator set monitoring offers status information for all critical prime mover and generator functions
- AC and DC digital generator set metering is provided. AC measurements are configurable for single or three phase sensing with PCC3300 measuring voltage, current, kW and kVAr offering a measurement accuracy of 1%
- Battery monitoring system continually monitors the battery output and warns of the potential occurrence of a weak battery condition
- Relay drivers for prime mover starter, fuel shutoff (FSO), glow plug/spark ignition power and switched B+ applications are provided
- Integrated generator set protection is offered to protect the prime mover and generator
- Real time clock for fault and event time stamping
- Exerciser clock and time of day start/stop initiate a test with or without load, or a Base Load or Peak Shave session
- Digital Power Transfer Control (Automatic Mains Failure) provides load transfer operation in open transition, closed transition, or soft (ramping) transfer modes
- Extended Paralleling (Peak Shave/Base Load) regulates the genset real and reactive power output while paralleled to the utility. Power can be regulated at either the genset or utility bus monitoring point
- Digital frequency synchronization and voltage matching
- Isochronous Load Sharing
- Droop kW and kVAr Control
- The synchronization check function provides adjustments for phase angle window, voltage window, frequency window and time delay
- Utility / AC Bus metering and protection with PCC3300 voltage, current, kW and kVAr offering a measurement accuracy of 1%
- Advanced serviceability is offered via InPower™, a PC-based software service tool
- PCC3300 is designed for reliable operation in harsh environments with the unit itself being a fully encapsulated module
- RS-485 ModBus interface for interconnecting to customer equipment
- Native on PCC3300: Four discrete inputs, two dry contact relay outputs and two low-side driver outputs are provided and are all configurable.
  - Optional extra PCC3300 input and output capability available via AUX101
- Warranty and service – Cummins Power Generation offers a comprehensive warranty and worldwide distributor service network
- Global regulatory certification and compliance: PCC3300 is suitable for use on gensets that are designed, manufactured, tested and certified to relevant UL, NFPA, ISO, IEC, Mil Std., UKCA and CE standards

©2022 Cummins Inc. | S-1570 (04/22)

Base Control Functions

HMI capability

Options: Local and remote HMI320 options are available

Operator adjustments: The HMI320 includes provisions for many set up and adjustment functions.

Genset hardware data: Access to the control and software part number, genset rating in kVA and genset model number is provided from the HMI320 or InPower.

Data logs: Information concerning all of the following parameters is periodically logged and available for viewing; engine run time, controller on time, number of start attempts, total kilowatt hours, and load profile. (Control logs data indicating the operating hours at percent of rated kW load, in 5% increments. The data is presented on the operation panel based on total operating hours on the generator.)

Fault history: Provides a record of the most recent fault conditions with control date and time stamp. Up to 32 events are stored in the control non-volatile memory.

Alternator data

- Voltage (single or three phase line-to-line and line-to-neutral)
- Current (single or three phase)
- kW, kVAr, Power Factor, kVA (three phase and total)
- Frequency

For Lean Burn Natural Gas Engine applications:

- Alternator heater status
- Alternator winding temperature (per phase) as well as alternator drive end and non-drive end bearing

Utility/AC bus data

- Voltage (three phase line-to-line and line-to-neutral)
- Current (three phase and total)
- kW, kVAR, Power Factor, kVA (three phase and total)
- Frequency

AmpSentry: 3x current regulation for downstream tripping/motor inrush management. Thermal damage curve (3-phase short) or fixed timer (2 sec for 1-Phase Short or 5 sec for 2-Phase short).

Engine data

- Starting battery voltage
- Engine speed
- Engine temperature
- Engine oil pressure
- Engine oil temperature
- Intake manifold temperature
- Coolant temperature
- Comprehensive Full Authority Engine (FAE) data (where applicable)

Lean Burn Natural Gas (LBNG) application parameters include:

- Safety shutoff valve status
- Valve proving status
- Downstream gas pressure
- Gas inlet pressure
- Gas mass flow rate
- Control valve position
- Gas outlet pressure
- Manifold pressure and temperature
- Throttle position
- Compressor outlet pressure
- Turbo speed
- Compressor bypass position
- Cylinder configuration (e.g., drive end and non-drive end configurations)
- Coolant pressure 1 and 2 as well as coolant temperature 1 and 2 for both HT/LT respectively
- Exhaust port temperature (up to 18 cylinders)
- Pre-filter oil pressure
- Exhaust back pressure
- Parent ECM internal temperature and isolated battery voltage
- Speed bias
- Child ECM internal temperature and isolated battery voltage
- Knock level, spark advance, and knock count (for up to 18 cylinders)
- Auxiliary supply disconnector status
- Engine heater status
- Coolant circulating pump status
- Lube oil priming pump status
- Lube oil status
- Oil heater status
- Derate authorization status
- Start system status
- Ventilator fan status
- Ventilation louvre status
- Radiator fan status
- DC PSU status
- Start inhibit/enable status and setup

Service adjustments – The HMI320 includes provisions for adjustment and calibration of genset control functions. Adjustments are protected by a password. Functions include:

- Engine speed governor adjustments
- Voltage regulation adjustments
- Cycle cranking
- Configurable fault set up
- Configurable input and output set up
- Meter calibration
- Paralleling setup
- Display language and units of measurement

Prime Mover Control

SAE-J1939 CAN interface to full authority ECMs (where applicable). Provides data transfer between genset and engine controller for control, metering and diagnostics.

12 V (DC) or 24 V (DC) nominal battery voltage is supported by PCC3300 for normal operation.

Temperature dependant prime mover governing dynamics: This function is supported enabling the engine to be responsive when warm and more stable when operating at lower temperature via providing control and modification over electronic governing parameters as a function of engine temperature.

Isochronous governing is provided in order to control prime mover speed within ±0.25% of nominal rated speed for any steady state load from no load to full load. During operation frequency drift should not exceed ±0.5% of nominal frequency given a 33ºC (or 60ºF) chance in ambient temperature within an eight-hour period.

Droop electronic speed is governing capability is natively offered by PCC3300 to permit droop from 0% to 10% between no load to full load.

Remote start capability is built into the PCC3300 as the unit accepts a ground signal from remote devices to automatically command the starting of the generator set as well as the reaching of rated speed, voltage and frequency or otherwise run at idle speed until prime mover temperature is adequate. The presence of a remote start signal shall cause the PCC3300 to leave sleep mode and return to normal power mode. PCC3300 supports an option for delayed start or stop.

Remote Start Integrity: In compliance with NEC2017 Start Signal Integrity standard – NFPA70 Article 700.10(D)(3), the remote start circuit from ATS to PCC3300 is continuously monitored for signal disturbance due to broken, disconnected or shorted wires via a configurable input. Loss of signal integrity results in activation of a remote start signal.

Remote and local emergency stopping capability: PCC3300 accepts ground signal from a locally or remoted mounted emergency stop switch to cause the generator set to immediately shutdown. The generator set is prevented from either running or cranking with the emergency stop switch engaged. If PCC3300 is in sleep mode, then the activation of any emergency stop switch shall return PCC3300 is normal powered state along with the activation of the corresponding shutdown and run-prevention states.

Sleep mode: PowerCommand 3.3 supports a configurable low current draw state, which is design with consideration to the needs of prime applications or others application without a battery charger (in order to minimize battery current drain).

Automatic prime mover starting: Any generator set controlled by PCC3300 is capable of automatic starting achieved via either magnetic pickup or main alternator output frequency. PCC3300 additionally supports configurable glow plug control where applicable.

Prime mover cycle cranking: PCC3300 supports configurable starting cycles and rest periods. Built in starter protection are incorporated to prevent the operator from specifying a starting sequence that may be damaging.

Configurable time delay functionality: PCC3300 supports time delayed generator set starting and stopping (for cooldown). Permissible time delays are as follows (noting a default setting is 0 seconds):

1. Start delay: 0 seconds to 300 seconds prior to starting after receiving a remote start signal.
2. Stop delay: 0 seconds to 600 seconds prior to shut down after receiving a signal to stop in normal operation modes.

Lean Burn Natural Gas application specific parameters

PCC3300 supports prime mover inhibiting in order to permit application-specific processes (i.e. Auxiliaries) to be started first.

Generator Control

PCC3300 performs both Genset voltage sensing and Genset voltage regulation as follows:

- Voltage sensing is integrated into PCC3300 via three phase line-to-line sensing that is compatible with shunt or PMG excitation systems
- Automatic voltage regulation is accomplished by using a three phase fully rectified input and has a FET output for good motor starting capability.

Major features of generator control include:

Digital output voltage regulation - Capable of regulating output voltage to within +/-1.0% for any loads between no load and full load. Voltage drift will not exceed +/-1.5% for a 40 ºC (104 ºF) change in temperature in an eight-hour period. On engine starting or sudden load acceptance, voltage is controlled to a maximum of 5% overshoot over nominal level.

The automatic voltage regulator feature can be disabled to allow the use of an external voltage regulator.

Droop voltage regulation - Control can be adjusted to droop from 0-10% from no load to full load.

Torque-matched V/Hz overload control - The voltage roll-off set point and rate of decay (i.e. the slope of the V/Hz curve) is adjustable in the control.

Fault current regulation - PowerCommand® will regulate the output current on any phase to a maximum of three times rated current under fault conditions for both single phase and three phase faults. In conjunction with a permanent magnet generator, it will provide three times rated current on all phases for motor starting and short circuit coordination purpose.

Cylinder Cut-off System (CCS): PCC 3300 supports Cylinder Cut-off System which is used to operate the engines on half bank at no load and light load conditions. CCS has below benefits on engine

performance- improved emission standards, improved fuel efficiency, reduced hydrocarbons, reduced white smoke, reduced wet stacking and higher exhaust temperature at light loads to improve turbocharger operations and catalyst performance.

Step Timing Control (STC): PCC 3300 supports STC functionality which is used to advance the engine timing of a hydro-mechanical engine during start up and light load conditions. During ADVANCED injection timing, it:

- Improves cold weather idling characteristics
- Reduces cold weather white smoke
- Improves light load fuel economy
- Reduces injector carboning

Paralleling Functions

First Start Sensor™ system – PowerCommand® provides a unique control function that positively prevents multiple gensets from simultaneously closing to an isolated bus under black start conditions. The First Start Sensor system is a communication system between the gensets that allows the gensets to work together to determine which genset is a system should be the first to close to the bus. The system includes an independent backup function, so that if the primary system is disabled the required functions are still performed.

Synchronizing – Control incorporates a digital synchronizing function to force the genset to match the frequency, phase and voltage of another source such as a utility grid. The synchronizer includes provisions to provide proper operation even with highly distorted bus voltage waveforms. The synchronizer can match other sources over a range of 60-110% of nominal voltage and -24 to +6 hertz. The synchronizer function is configurable for slip frequency synchronizing for applications requiring a known direction of power flow at instant of breaker closure or for applications where phase synchronization performance is otherwise inadequate.

Load sharing control – The genset control includes an integrated load sharing control system for both real (kW) and reactive (kVar) loads when the genset(s) are operating on an isolated bus. The control system determines kW load on the engine and kVar load on the alternator as a percent of genset capacity, and then regulates fuel and excitation systems to maintain system and genset at the same percent of load without impacting voltage or frequency regulation. The control can also be configured for operation in droop mode for kW or Kvar load sharing.

Load govern control– When PowerCommand® receives a signal indicating that the genset is paralleled with an infinite source such as a utility (mains) service, the genset will operate in load govern mode. In this mode the genset will synchronize and close to the bus, ramp to a pre-programmed kW and kVar load level, and then operate at that point. Control is adjustable for kW values from 0-100% of standby rating, and 0.7-1.0 power factor (lagging). Default setting is 80% of standby and 1.0 power factor. The control includes inputs to allow independent control of kW and kVar load level by a remote device while in the load govern mode. The rate of load increase and decrease is also adjustable in the control. In addition, the control can be configured for operation in kW or kVAR load govern droop.

Load demand control – The control system includes the ability to respond to an external signal to initiate load demand operation. On command, the genset will ramp to no load, open its paralleling breaker, cool down, and shut down. On removal of the command, the genset will immediately start, synchronize, connect, and ramp to its share of the total load on the system.

Sync check – The sync check function decides when permissive conditions have been met to allow breaker closure. Adjustable criteria are: phase difference from 0.1-20 deg, frequency difference from 0.001-1.0 Hz, voltage difference from 0.5-10%, and a dwell time from 0.5-5.0 sec. Internally the sync check is used to perform closed transition operations. An external sync check output is also available.

Genset and utility/AC bus source AC metering – The control provides comprehensive three phase AC metering functions for both monitored sources, including: 3-phase voltage (L-L and L-N) and current, frequency, phase rotation, individual phase and totalized values of kW, kVAR, kVA and Power Factor; totalized positive and negative kW-hours, kVAR-hours, and kVA-hours. Three wire or four wire voltage connection with direct sensing of voltages to 600V, and up to 45kV with external transformers. Current sensing is accomplished with either 5 amp or 1 CT secondaries and with up to 10,000 amp primary. Maximum power readings are 32,000kW/kVAR/kVA.

Power transfer control – provides integrated automatic power transfer functions including source availability sensing, genset start/stop and transfer pair monitoring and control. The transfer/retransfer is configurable for open transition, fast closed transition (less than 100msec interconnect time), or soft closed transition (load ramping) sequences of operation. Utility source failure will automatically start genset and transfer load, retransferring when utility source returns. Test will start gensets and transfer load if test with load is enabled. Sensors and timers include:

Under voltage sensor: 3-phase L-N or L-L under voltage sensing adjustable for pickup from 85-100% of nominal. Dropout adjustable from 75-98% of pickup. Dropout delay adjustable from 0.1-30 sec.

Over voltage sensor: 3-phase L-N or L-L over voltage sensing adjustable for pickup from 95-99% of dropout. Dropout adjustable from 105-135% of nominal. Dropout delay adjustable from 0.5-120 sec. Standard configuration is disabled and is configurable to enabled in the field using the HMI or InPower service tools.

Over/Under frequency sensor: Center frequency adjustable from 45-65 Hz. Dropout bandwidth adjustable from 0.3-5% of center frequency beyond pickup bandwidth. Pickup bandwidth adjustable from 0.3-20% of center frequency. Field configurable to enable.

Loss of phase sensor: Detects out of range voltage phase angle relationship. Field configurable to enable.

Phase rotation sensor: Checks for valid phase rotation of source. Field configurable to enable.

Breaker tripped: If the breaker tripped input is active, the associated source will be considered as unavailable.

Timers: Control provides adjustable start delay from 0 - 300sec, stop delay from 0 - 800sec, transfer delay from 0-120sec, retransfer delay from 0-1800sec, programmed transition delay from 0-60sec, and maximum parallel time from 0-1800sec.

Negative Sequence Current Protection: PCC3300 supports this protection natively in order to determine if the generator is at any point was running subject to negative phase sequencing.

Breaker control – Utility and Genset breaker interfaces include separate relays for opening and closing breaker, as well as inputs for both 'a' and 'b' breaker position contacts and tripped status. Breaker diagnostics include Contact Failure, Fail to Close, Fail to Open, Fail to Disconnect, and Tripped. Upon breaker failure, appropriate control action is taken to maintain system integrity.

Exerciser clock –The exerciser clock (when enabled) allows the system to be operated at preset times in either test without load, test with load, or extended parallel mode. A Real Time Clock is built in. Up to 12 different programs can be set for day of week, time of day, duration, repeat interval, and mode. For example, a test with load for 1 hour every Tuesday at 2AM can be programmed. Up to 6 different exceptions can also be set up to block a program from running during a specific date and time period.

Extended paralleling – In extended paralleling mode (when enabled) the controller will start the genset and parallel to a utility source and then govern the real and reactive power output of the genset based on the desired control point. The control point for the real power (kW) can be configured for either the genset metering point ("Base Load") or the utility metering point ("Peak Shave"). The control point for the reactive power (kVAR or Power Factor) can also be independently configured for either the genset metering point or the utility metering point. This flexibility would allow base kW load from the genset while maintaining the utility power factor at a reasonable value to avoid penalties due to low power factor. The System always operates within genset ratings. The control point can be changed while the system is in operation. Set points can be adjusted via hardwired analog input or adjusted through an operator panel display or service tool.

Application types – Controller is configured to operating in one of six possible application types. These topologies are often used in combinations in larger systems, with coordination of the controllers in the system either by external device or by interlocks provided in the control. Topologies that may be selected in the control include:

Standalone: Control provides monitoring, protection and control in a non-paralleling application.

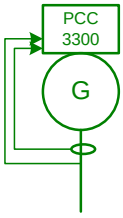

Synchronizer only: control will synchronize the genset to other source when commanded to either via a hardwired or Modbus driven input.

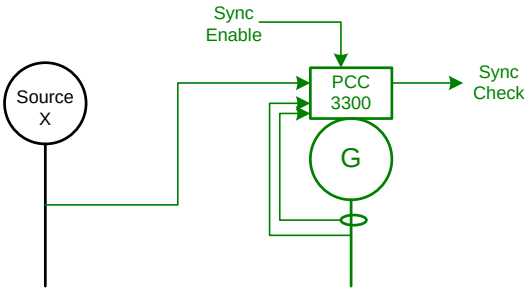

Isolated Bus: allows the genset to perform a dead bus closure or synchronize to the bus and isochronously share kW and kVAR loads with other gensets.

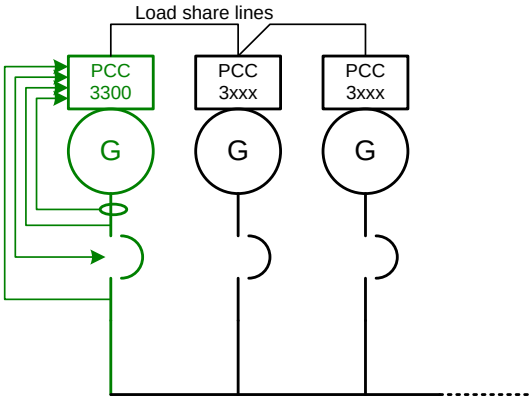

Utility Single: Control monitors one genset and utility. The control will automatically start and provide power to a load if the utility fails. The control will also resynchronize the genset back to the utility and provides extended paralleling capabilities.

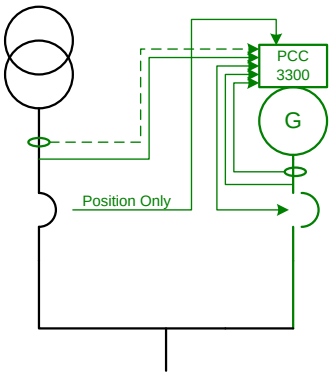

Utility Multiple: Supports all functionality of Isolated Bus and provides extended paralleling to the utility. Extended paralleling load set points follow a constant setting; dynamically follow an analog input, Modbus register or HMI.

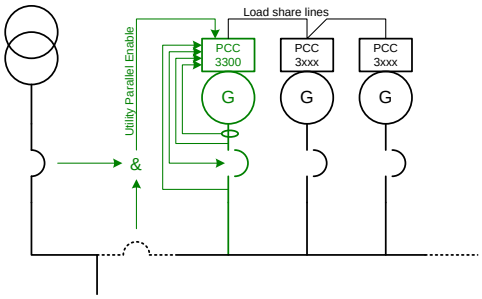

Power Transfer Control: Control operates a single genset/single utility transfer pair in open transition, fast closed transition, or soft closed transition. Extended paralleling functionality also provides base load and peak shave options.

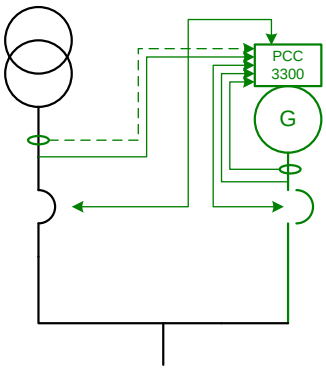

Masterless Load Demand (Optional Feature):

PowerCommand® 3.3 with Masterless Load Demand (MLD) technology enables generator sets to start/stop automatically based on load demand. Masterless Load Demand-capable generators are equipped with an additional s-CAN network connection that allows sharing of information amongst paralleled generator sets. MLD has been designed for hassle-free installation, commissioning and operation. MLD functionality. Integrated on-board system logic provides the MLD topology control without the need for any additional system.

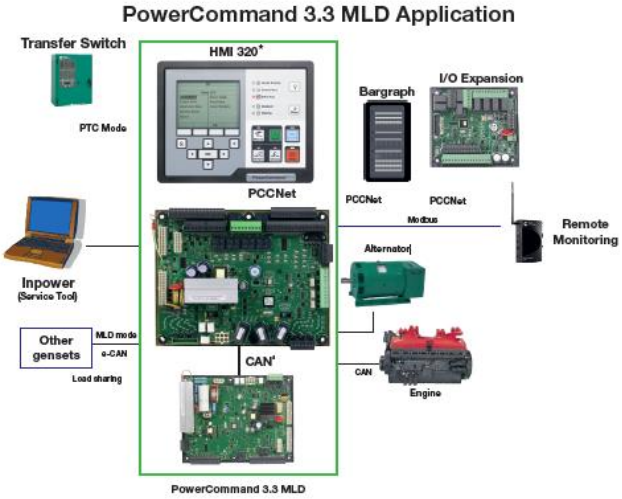

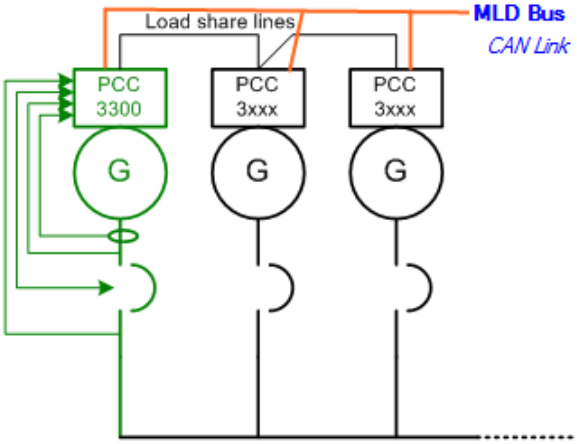

PCC3300 External Voltage and Frequency Biasing Inputs

PCC3300 supports externally driven voltage and frequency biasing capability in order to permit external paralleling (if intending to use this feature please contact your local distributor for further information).

Protective Functions

On operation of a protective function the control will indicate a fault by illuminating the appropriate status LED on the HMI, as well as display the fault code and fault description on the LCD. The nature of the fault and time of occurrence are logged in the control. The service manual and InPower service tool provide service keys and procedures based on the service codes provided. Protective functions include:

Battle short mode

When enabled and the *battle short* switch is active, the control will allow some shutdown faults to be bypassed. If a bypassed shutdown fault occurs, the fault code and description will still be annunciated, but the genset will not shutdown. This will be followed by a *fail to shutdown* fault. Emergency stop shutdowns and others that are critical for proper operation (or are handled by the engine ECM) are not bypassed. Please refer to the Control Application Guide or Manual for list of these faults.

Derate

The Derate function reduces output power of the genset in response to a fault condition. If a Derate command occurs while operating on an isolated bus, the control will issue commands to reduce the load on the genset via contact closures or Modbus. If a Derate command occurs while in utility parallel mode, the control will actively reduce power by lowering the base load kW to the derated target kW.

Configurable alarm and status inputs

The control accepts up to four alarm or status inputs (configurable contact closed to ground or open) to indicate a configurable (customer-specified) condition.

The control is programmable for warning, derate, shutdown, shutdown with cooldown or status indication and for labeling the input.

Emergency stop

Annunciated whenever either emergency stop signal is received from external switch.

General prime mover protection

Low and high battery voltage warning - Indicates status of battery charging system (failure) by continuously monitoring battery voltage.

Weak battery warning - The control system will test the battery each time the genset is signaled to start and indicate a warning if the battery indicates impending failure.

Low coolant level warning – Can be set up to be a warning or shutdown.

Low coolant temperature warning – Indicates that engine temperature may not be high enough for a 10 second start or proper load acceptance.

Fail to start (overcrank) shutdown - The control system will indicate a fault if the genset fails to start by the completion of the engine crack sequence.

Fail to crank shutdown - Control has signaled starter to crank engine but engine does not rotate.

Cranking lockout - The control will not allow the starter to attempt to engage or to crank the engine when the engine is rotating.

Fault simulation –The control in conjunction with InPower software, will accept commands to allow a technician to verify the proper operation of the control and its interface by simulating failure modes or by forcing the control to operate outside of its normal operating ranges. InPower also provides a complete list of faults and settings for the protective functions provided by the controller.

For Lean Burn Natural Gas Engine applications:

Off load running (protection) – This feature protects the engine in the event the genset is being called to go off load for too long.

Hydro Mechanical fuel system engine protection:

Overspeed shutdown – Default setting is 115% of nominal

Low lube oil pressure warning/shutdown – Level is preset (configurable with InPower or HMI) to match the capabilities of the engine used. Control includes time delays to prevent nuisance alarms.

High lube oil temperature warning/shutdown – Level is preset (configurable with InPower or HMI) to match the capabilities of the engine used. Control includes time delays to prevent nuisance alarms.

High engine temperature warning/shutdown – Level is preset (configurable with InPower or HMI) to match the capabilities of the engine used. Control includes time delays to prevent nuisance alarms.

Low coolant temperature warning – Indicates that engine temperature may not be high enough for a 10 second start or proper load acceptance.

High intake manifold temperature shutdown – Level is preset (configurable with InPower or HMI) to match the capabilities of the engine used. Control includes time delays to prevent nuisance alarms.

Full authority electronic engine protection:

Engine fault detection is handled inside the engine ECM. Fault information is communicated via the SAE-J1939 data link for annunciation in the HMI.

Alternator Protection

AmpSentry protective relay - A comprehensive monitoring and control system integral to the PowerCommand® Control System that guards the electrical integrity of the alternator and power system by providing protection against a wide array of fault conditions in the genset or in the load. It also provides single and three phase fault current regulation (3x Current) so that downstream protective devices have the maximum current available to quickly clear fault conditions without subjecting the alternator to potentially catastrophic failure conditions. Thermal damage curve (3 phase short) or fixed timer (2sec for 1P short, 5sec for 2P short). See document R1053 for a full-size time over current curve. The control does not included protection required for interconnection to a utility (mains) service.

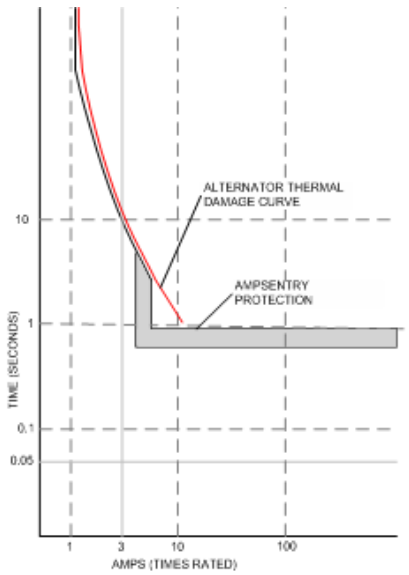

AmpSentry Maintenance Mode (AMM) - Instantaneous tripping, if AmpSentry Maintenance mode is active (50mS response to turn off AVR excitation/shutdown genset) for arc flash reduction when personnel are near genset.

High AC voltage shutdown (59) - Output voltage on any phase exceeds preset values. Time to trip is inversely proportional to amount above threshold. Values adjustable from 105-125% of nominal voltage, with time delay adjustable from 0.1-10 seconds. Default value is 110% for 10 seconds.

Low AC voltage shutdown (27) - Voltage on any phase has dropped below a preset value. Adjustable over a range of 50-95% of reference voltage, time delay 2-20 seconds. Default value is 85% for 10 seconds. Function tracks reference voltage. Control does not nuisance trip when voltage varies due to the control directing voltage to drop, such as during a V/Hz roll-off or synchronizing.

Under frequency shutdown (81 u) - Genset output frequency cannot be maintained. Settings are adjustable from 2-10 Hz below reference governor set point, for a 5-20 second time delay. Default: 6 Hz, 10 seconds. Under frequency protection is disabled when excitation is switched off, such as when engine is operating in idle speed mode.

Over frequency shutdown/warning (81o) - Genset is operating at a potentially damaging frequency level. Settings are adjustable from 2-10 Hz above nominal governor set point for a 1-20 second time delay. Default: 6 Hz, 20 seconds, disabled.

Overcurrent warning/shutdown (51) - Implementation of the thermal damage curve with instantaneous trip level calculated based on current transformer ratio and application power rating.

Loss of sensing voltage shutdown - Shutdown of genset will occur on loss of voltage sensing inputs to the control.

Field overload shutdown - Monitors field voltage to shutdown genset when a field overload condition occurs.

Over load (kW) warning - Provides a warning indication when engine is operating at a load level over a set point. Adjustment range: 80-140% of application rated kW, 0-120 second delay. Defaults: 105%, 60 seconds.

Reverse power shutdown (32) - Adjustment range: 5-20% of standby kW rating, delay 1-15 seconds. Default: 10%, 3 seconds.

Reverse Var shutdown (40) - Shutdown level is adjustable: 15-50% of rated Var output, delay 10-60 seconds. Default: 20%, 10 seconds.

Short circuit protection - Output current on any phase is more than 175% of rating and approaching the thermal damage point of the alternator. Control includes algorithms to protect alternator from repeated over current conditions over a short period of time.

Negative sequence overcurrent warning (46) – Control protects the generator from damage due to excessive imbalances in the three phase load currents and/or power factors.

Custom overcurrent warning/shutdown (51) – Control provides the ability to have a custom time overcurrent protection curve in addition to the AmpSentry protective relay function.

Ground fault overcurrent (51G) – Control detects a ground fault either by an external ground fault relay via a contact input or the control can measure the ground current from an external current transformer. Associated time delays and thresholds are adjustable via InPower or HMI.

Paralleling Protection

Breaker fail to close Warning: When the control signals a circuit breaker to close, it will monitor the breaker auxiliary contacts and verify that the breaker has closed. If the control does not sense a breaker closure within an adjustable time period after the close signal, the fail to close warning will be initiated.

Breaker fail to open warning: The control system monitors the operation of breakers that have been signaled to open. If the breaker does not open within and adjustable time delay, a Breaker Fail to Open warning is initiated.

Breaker position contact warning: The controller will monitor both 'a' and 'b' position contacts from the breaker. If the contacts disagree as to the breaker position, the breaker position contact warning will be initiated.

Breaker tripped warning: The control accepts inputs to monitor breaker trip / bell alarm contact and will initiate a breaker tripped warning if it should activate.

Fail to disconnect warning: In the controller is unable to open either breaker, a fail to disconnect warning is initiated. Typically, this would be mapped to a configurable output, allowing an external device to trip a breaker.

Fail to synchronize warning: Indicates that the genset could not be brought to synchronization with the bus. Configurable for adjustable time delay of 10 -900 seconds, 120 default.

Phase sequence sensing warning: Verifies that the genset phase sequence matches the bus prior to allowing the paralleling breaker to close.

Maximum parallel time warning (power transfer control mode only): During closed transition load transfers, control independently monitors paralleled time. If time is exceeded, warning is initiated and genset is disconnected.

Bus or genset PT input calibration warning: The control system monitors the sensed voltage from the bus and genset output voltage potential transformers. When the paralleling breaker is closed, it will indicate a warning condition if the read values are different.

Field Control Interface

Input signals to the PowerCommand® control include:

- Coolant level (where applicable)
- Fuel level (where applicable)
- Remote emergency stop
- Remote fault reset
- Remote start
- Rupture basin
- Start type signal
- Battle short
- Load demand stop
- Synchronize enable
- Genset circuit breaker inhibit
- Utility circuit breaker inhibit
- Single mode verify
- Transfer inhibit – prevent transfer to utility (in power transfer control mode)
- Retransfer inhibit – prevent retransfer to genset (in power transfer control mode)
- kW and kVAR load setpoints

Configurable inputs - Control includes (4) input signals from customer discrete devices that are configurable for warning, shutdown or status indication, as well as message displayed

Input signals for Lean Burn Natural Gas Engine applications:

- Gearbox oil pressure/temperature protection
- Fire fault
- Earth fault support as a discrete input via an appropriate secondary detection device
- Differential fault
- DC power supply fault
- Genset Interface Box (GIB) isolator open fault
- Start inhibit/enable (x3)
- Radiator fan trip
- Ventilator fan trip
- Ventilation louvers closed
- Start system trip
- Alternator heater trip
- Alternator heater status
- Alternator winding temperature (PT100 RTDx3)
- Alternator drive end bearing temperature (PT100 RTD)
- Alternator non-drive end bearing temperature (PT100 RTD)

Output signals from the PowerCommand® control include:

- Load dump signal: Operates when the genset is in an overload condition.
- Delayed off signal: Time delay-based output which will continue to remain active after the control has removed the run command. Adjustment range: 0 - 120 seconds. Default: 0 seconds.

- Configurable relay outputs: Control includes (4) relay output contacts (3 A, 30VDC). These outputs can be configured to activate on any control warning or shutdown fault as well as ready to load, not in auto, common alarm, common warning and common shutdown.
- Ready to load (genset running) signal: Operates when the genset has reached 90% of rated speed and voltage and latches until genset is switched to off or idle mode.
- Paralleling circuit breaker relays outputs: Control includes (4) relay output contacts (3.5A, 30 VDC) for opening and closing of the genset and utility breakers.

Output Signals for Lean Burn Natural Gas Engine applications:

- Start inhibit/enable event
- Emergency stop event
- Ventilator fan run control
- Louvre control
- Radiator fan control
- Alternator heater control
- Engine at idle speed event

Communications connections include:

- PC tool interface: This RS-485 communication port allows the control to communicate with a personal computer running InPower software.
- Modbus RS-485 port: Allows the control to communicate with external devices such as PLCs using Modbus protocol.

  Note - An RS-232 or USB to RS-485 converter is required for communication between PC and control.
- Networking: This RS-485 communication port allows connection from the control to the other Cummins Power Generation products.

Mechanical Drawing

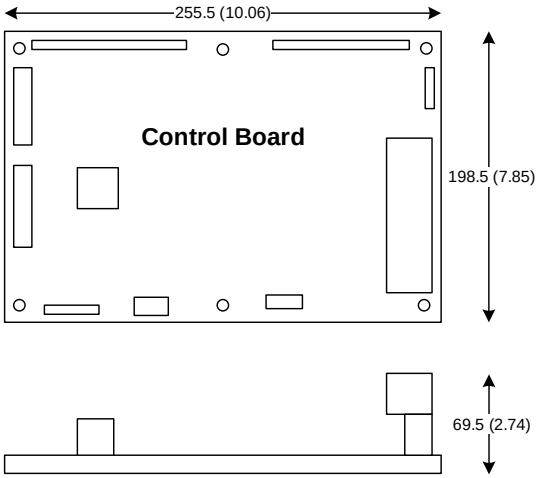

PowerCommand® Human Machine Interface HMI320

Description

This control system includes an intuitive operator interface panel that allows for complete genset control as well as system metering, fault annunciation, configuration and diagnostics. The interface includes five genset status LED lamps with both internationally accepted symbols and English text to comply with customer's needs. The interface also includes an LED backlit LCD display with tactile feel soft-switches for easy operation and screen navigation. It is configurable for units of measurement and has adjustable screen contrast and brightness.

The *run/off/auto* switch function is integrated into the interface panel.

All data on the control can be viewed by scrolling through screens with the navigation keys. The control displays the current active fault and a time-ordered history of the five previous faults.

Features:

- LED indicating lamps
  - genset running
  - remote start
  - not in auto
  - shutdown
  - warning
  - auto
  - manual and stop
  - Circuit breaker open (if equipped)
  - Circuit breaker closed (if equipped)
- 320 x 240 pixels graphic LED backlight LCD.
- Four tactile feel membrane switches for LCD defined operation. The functions of these switches are defined dynamically on the LCD.
- Seven tactile feel membrane switches dedicated screen navigation buttons for up, down, left, right, ok, home and cancel.
- Six tactile feel membrane switches dedicated to control for auto, stop, manual, manual start, fault reset and lamp test/panel lamps.
- Two tactile feel membrane switches dedicated to control of circuit breaker (where applicable).
- Allows for complete genset control setup.
- Certifications: Suitable for use on gensets that are designed, manufactured, tested and certified to relevant UL, NFPA, ISO, IEC, Mil Std., UKCA and CE standards.
- Languages supported: English, Spanish, French, German, Italian, Greek, Portuguese, Finnish, Norwegian, Danish, Russian (Cyrillic), Chinese, Hungarian, Japanese, Polish, Korean, Romanian, Brazilian Portuguese, Turkish, Dutch, and Czech

Communications connections include:

- PC tool interface - This RS-485 communication port allows the HMI to communicate with a personal computer running InPower.
- This RS-485 communication port allows the HMI to communicate with the main control board.

Mechanical Drawing

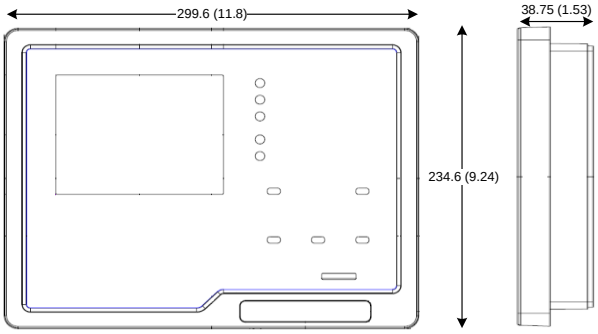

HMI

Dimensions: mm (inches)

Software

InPower (beyond 6.5 version) is a PC-based software service tool that is designed to directly communicate to PowerCommand® gensets and transfer switches, to facilitate service and monitoring of these products.

©2022 Cummins Inc. | S-1570 (04/22)

Environment

The control is designed for proper operation without recalibration in ambient temperatures from -40 ºC (-40 ºF) to +70º C (158 ºF), and for storage from -55 ºC (-67 ºF) to +80 ºC (176 ºF). Control will operate with humidity up to 95%, non-condensing.

The HMI is designed for proper operation in ambient temperatures from -20 ºC (-4 ºF) to +70 ºC (158 ºF), and for storage from -30 ºC (-22 ºF) to +80 ºC (176 ºF).

The control board is fully encapsulated to provide superior resistance to dust and moisture. Display panel has a single membrane surface, which is impervious to effects of dust, moisture, oil and exhaust fumes. This panel uses a sealed membrane to provide long reliable service life in harsh environments.

The control system is specifically designed and tested for resistance to RFI/EMI and to resist effects of vibration to provide a long reliable life when mounted on a genset. The control includes transient voltage surge suppression to provide compliance to referenced standards.

Certifications

PowerCommand® meets or exceeds the requirements of the following codes and standards:

- NFPA 110 for level 1 and 2 systems.
- ISO 8528-4:2005 compliance, controls and switchgear (second edition)
- CE marking: The CE marking is only valid when equipment is used in a fixed installation application. Material compliance declaration is available upon request.
- UKCA marking- The UKCA marking is only valid when equipment is used in a fixed installation application. Material compliance declaration is available upon request.
- EN 50081-1,2 residential/light industrial emissions or industrial emissions.
- EN 50082-1,2 residential/light industrial or industrial susceptibility.
- ISO 7637-2, level 2; DC supply surge voltage test.
- Mil Std 202C, Method 101 and ASTM B117: Salt fog test.
- UL 6200 recognized, suitable for use on UL 2200 Listed generator sets.
- CSA C282-M1999 compliance
- CSA 22.2 No. 14 M91 industrial controls.
- PowerCommand® control systems and generator sets are designed and manufactured in ISO 9001 certified facilities.
- ROHS (Restriction of Hazardous substance) complaint both for HMI 320 & PCC3300v2.

Reference Documents

Please refer to the following reference documents available in the PowerSuite library:

- PowerCommand™ 3.3. Application Guide
- T-037: PowerCommand Control Application Manual (ANSI Protective Functions)
- T-040: PowerCommand 3.3 Paralleling Application Guide

Please refer to the following reference documents available on Cummins Quickserve:

- Service Manuals for PC3.3 (non-MLD) and PC3.3 (MLD)
- Modbus Register Mapping

Warranty

All components and subsystems are covered by an express limited one-year warranty. Other optional and extended factory warranties and local distributor maintenance agreements are available.

PCCNet COMPATIBLE

Alternator Data Sheet
Frame Size: LVSI804T

Characteristics

		1-bearing		2-bearing	
	No of Bearings:	**1-bearing**		**2-bearing**	
Weights:	Stator assembly:	8521 lb	3865 kg	8521 lb	3865 kg
	Rotor assembly:	4392 lb	1992 kg	4246 lb	1926 kg
	Complete assembly:	12912 lb	5857 kg	12767 lb	5791 kg
Maximum speed:		2250 rpm			
Excitation current:	Full load:	Wdg 12: 3.6; Wdg 13: 3.6; Wdg 19: 3.14			
	No load:	Wdg 12: 0.86; Wdg 13: 0.86; Wdg 19: 0.86			
Insulation system:	Class H throughout				

3 Ø Ratings (0.8 power factor)			**60 Hz** (winding no)					
			380 (13)	416 (12)	440 (12)	460 (12)	480 (12)	480 (19)
163° C rise ratings	@ 27° C	kW	2992	2792	2952	3086	3220	N/A
		kVA	3740	3490	3690	3857	4025	N/A
150° C rise ratings	@ 40° C	kW	2904	2712	2872	3002	3132	N/A
		kVA	3630	3390	3590	3752	3915	N/A
125° C rise ratings	@ 40° C	kW	2720	2536	2684	2806	2928	N/A
		kVA	3400	3170	3355	3508	3660	N/A
105° C rise ratings	@ 40° C	kW	2504	2328	2464	2576	2688	2250
		kVA	3130	2910	2080	3220	3360	2813
80° C rise ratings	@ 40° C	kW	2200	2080	2200	2875	2400	N/A
		kVA	2750	2600	2750	2300	3000	N/A

3 Ø Reactances	380 (13)	416 (12)	440 (12)	460 (12)	480 (12)	480 (19)
(Based on full load at 125° C rise rating)						
Synchronous	2.900	3.113	2.945	2.820	2.700	2.070
Transient	0.214	0.227	0.215	0.206	0.197	0.151
Subtransient	0.158	0.166	0.157	0.150	0.144	0.111
Negative sequence	0.226	0.240	0.227	0.217	0.208	0.160
Zero sequence	0.029	0.031	0.029	0.028	0.027	0.021

3 Ø Motor starting	380 (13)	416 (12)	440 (12)	460 (12)	480 (12)	480 (19)
Maximum kVA (90% sustained voltage)	10049	9719	9719	9719	9719	9720

Time constants (sec)	380 (13)	416 (12)	440 (12)	460 (12)	480 (12)	480 (19)
Transient	0.190	0.190	0.190	0.190	0.190	0.190
Subtransient	0.015	0.015	0.015	0.015	0.015	0.015
Open circuit	4.300	4.400	4.400	4.400	4.400	4.400
DC	0.075	0.072	0.072	0.072	0.072	0.072

Windings (@22° C)		380 (13)	416 (12)	440 (12)	460 (12)	480 (12)	480 (19)
Stator resistance	(L-L Ohms)	0.00063	0.00088	0.00088	0.00088	0.00088	0.00088
Rotor resistance	(Ohms)	1.500	1.500	1.500	1.500	1.500	1.500
Number of leads		6	6	6	6	6	6

ALTERNATOR DATA SHEET Frame Size LVSI804T

THREE PHASE EFFICIENCY CURVES **WDG 12** **60 Hz**

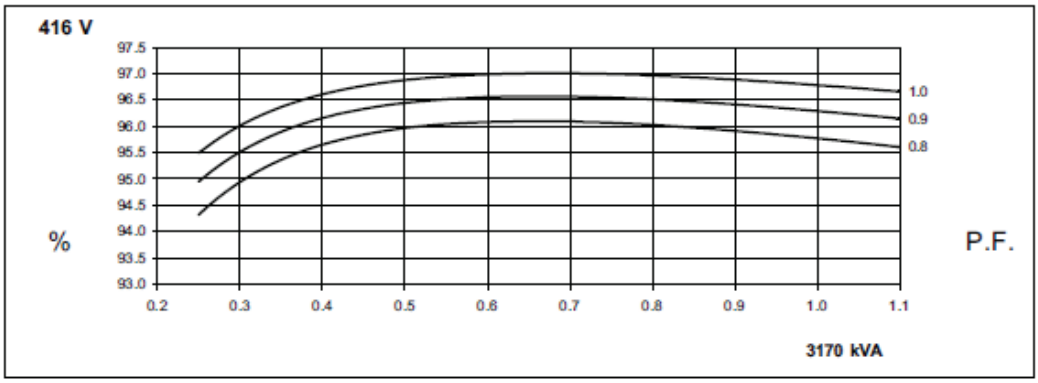

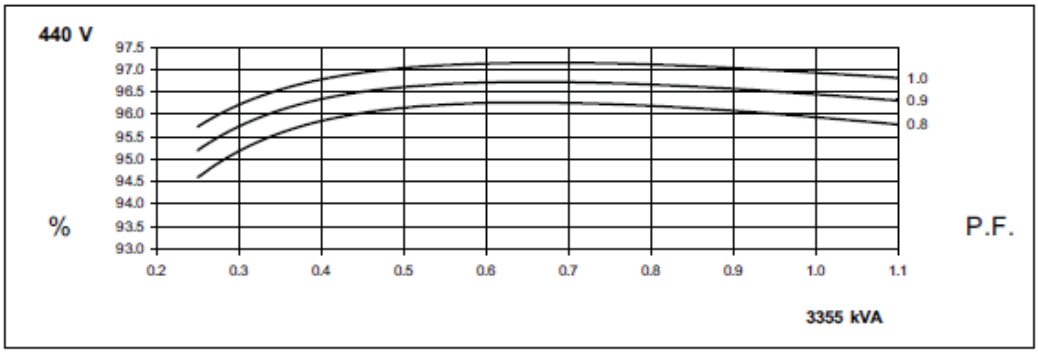

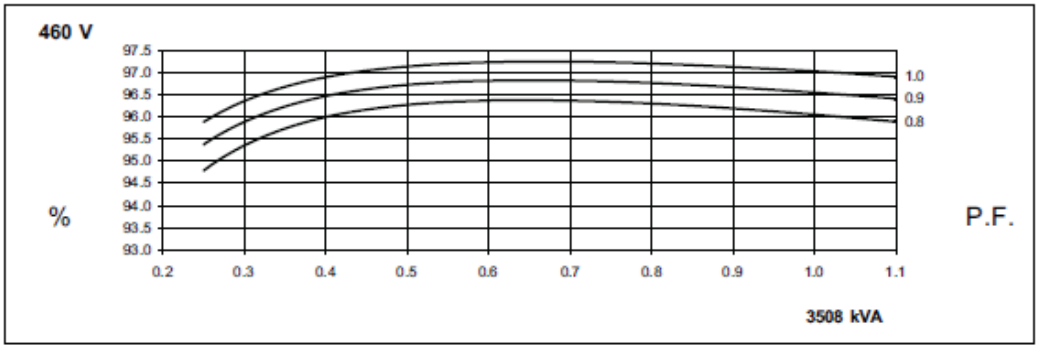

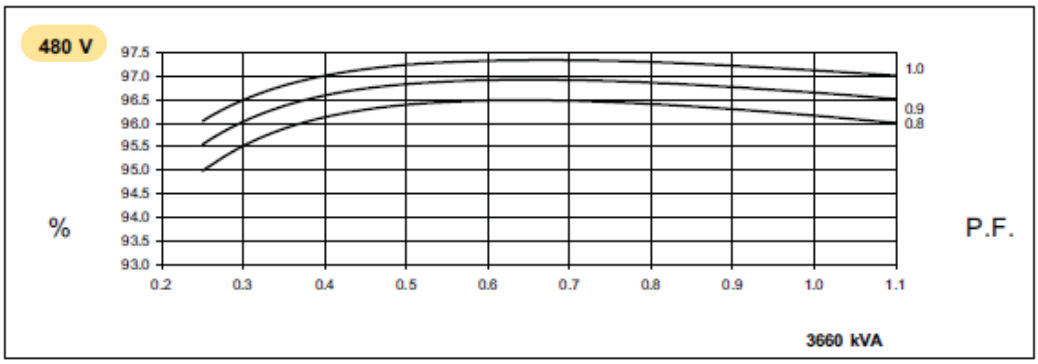

FRAME LV 804 T WDG 12 50Hz

FULL WAVE RECTIFIED AVR
LOCKED ROTOR MOTOR STARTING CURVE

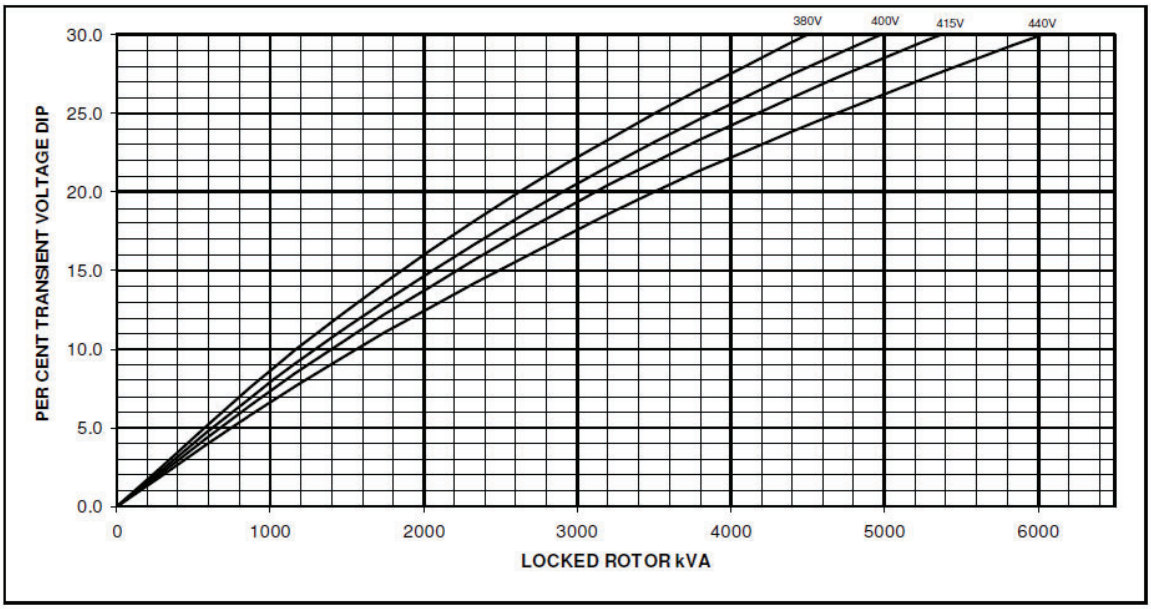

FRAME LV 804 T WDG 12 60Hz

FULL WAVE RECTIFIED AVR
LOCKED ROTOR MOTOR STARTING CURVE

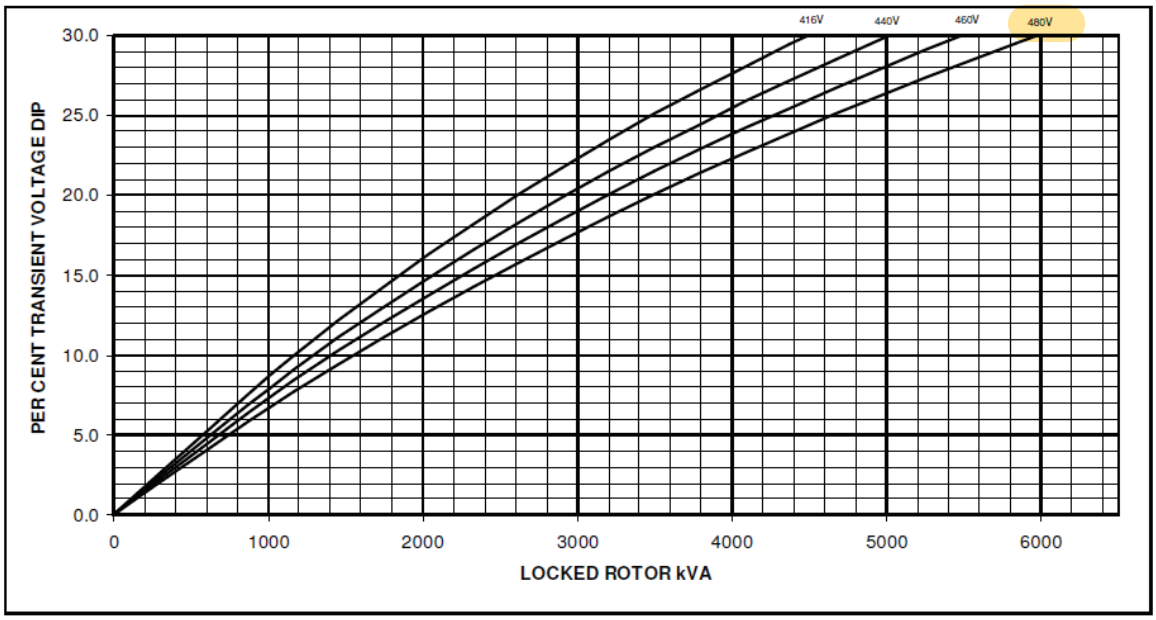

FRAME LV 804 T WDG 12 50Hz

Three Phase Short Circuit Decrement Curve
No- Load Excitation at Rated Speed

Based on series star (wye) connection

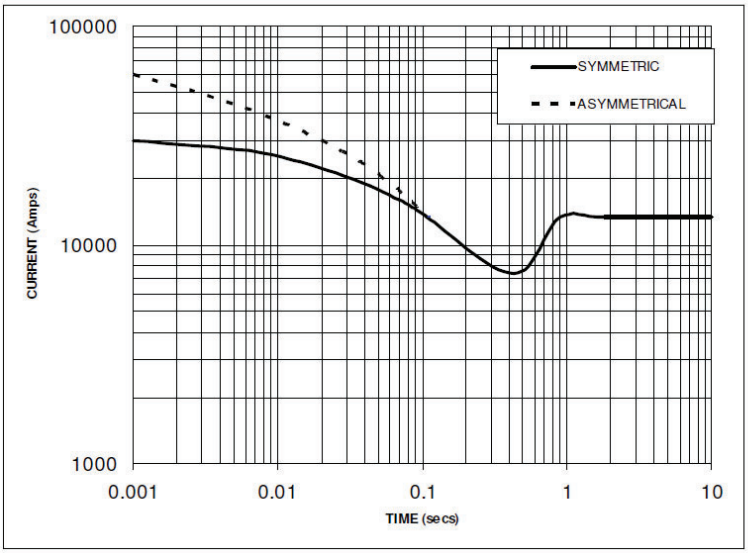

NOTE 1
THE FOLLOWING MULTIPLICATION FACTORS SHOULD BE USED TO ADJUST THE VALUES FROM CURVES BETWEEN THE 0.001 SECONDS AND THE MINIMUM CURRENT POINT IN RESPECT OF NOMINAL OPERATING VOLTAGE

VOLTAGE	FACTOR
380V	X 0.95
400V	X 1.00
415V	X 1.04
440V	X1.10

THE SUSTAINED CURRENT VALUE IS CONSTANT IRRESPECTIVE OF VOLTAGE LEVEL

NOTE 2
THE FOLLOWING MULTIPLICATION FACTORS SHOULD BE USED TO CONVERT THE VALUES CALCULATED IN ACCORDANCE WITH NOTE 1 TO THOSE APPLICABLE TO THE VARIOUS TYPES OF SHORT CIRCUIT

	3 PHASE	2 PHASE L-L	1 PHASE L-N
INSTANTANEOUS	X 1.0	X 0.87	X 1.30
MINIMUM	X 1.0	X 1.80	X 3.20
SUSTAINED	X 1.0	X 1.50	X 2.50
MAX SUSTAINED DURATION	10 SEC	5 SEC	2 SEC

ALL OTHER TIMES ARE UNCHANGED

SUSTAINED SHORT CIRCUIT = 13427 Amps

FRAME LV 804 T WDG 12 60Hz

Three Phase Short Circuit Decrement Curve
No- Load Excitation at Rated Speed

Based on series star (wye) connection

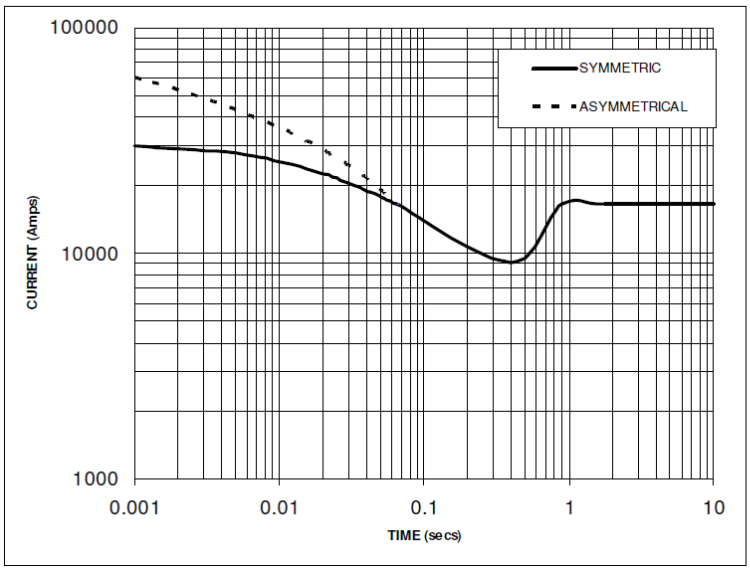

NOTE 1
THE FOLLOWING MULTIPLICATION FACTORS SHOULD BE USED TO ADJUST THE VALUES FROM CURVES BETWEEN THE 0.001 SECONDS AND THE MINIMUM CURRENT POINT IN RESPECT OF NOMINAL OPERATING VOLTAGE

VOLTAGE	FACTOR
416V	X 0.87
440V	X 0.92
460V	X0.96
480V	X1.00

THE SUSTAINED CURRENT VALUE IS CONSTANT IRRESPECTIVE OF VOLTAGE LEVEL

NOTE 2
THE FOLLOWING MULTIPLICATION FACTORS SHOULD BE USED TO CONVERT THE VALUES CALCULATED IN ACCORDANCE WITH NOTE 1 TO THOSE APPLICABLE TO THE VARIOUS TYPES OF SHORT CIRCUIT

	3 PHASE	2 PHASE L-L	1 PHASE L-N
INSTANTANEOUS	X 1.0	X 0.87	X 1.30
MINIMUM	X 1.0	X 1.80	X 3.20
SUSTAINED	X 1.0	X 1.50	X 2.50
MAX SUSTAINED DURATION	10 SEC	5 SEC	2 SEC

ALL OTHER TIMES ARE UNCHANGED

SUSTAINED SHORT CIRCUIT = 16509 Amps

High Ambient Air Temperature Radiator Cooling System											
				Max cooling @ air flow static restriction, unhoused (inches water/mm water)					Housed in free air, no air discharge restriction		
				0.0/0.0	0.25/6.4	0.5/12.7	0.75/19.1	1.0/25.4	Weather	Sound level 1	Sound level 2
	Fuel Type	**Duty**	**Rating (kW)**	**Maximum allowable ambient temperature, degree C**							
60 Hz	Diesel	Standby	2500	51	49	48	43	41	N/A	N/A	N/A
		DCC	2250	56	53	51	47	42	N/A	N/A	N/A
				Airflow (m^3/s) – Actual @ Fan							
				50.6	47.7	44.6	42.1	39.4	N/A	N/A	N/A

Notes:

1. Data shown are anticipated cooling performance for typical generator set.
2. Cooling data is based on 1000 ft (305 m) site test location.
3. Generator set power output may need to be reduced at high ambient conditions. Consult generator set data sheet for derate schedules.
4. Cooling performance may be reduced due to several factors including but not limited to: Incorrect installation, improper operation, fouling of the cooling system, and other site installation variables.

Sound data

2500DQKAN 60 Hz

Global Weather House Enclosure to Reduce 20-25 dBA @ 23 feet.

Sound pressure level @ 7 meters, dB(A)

See notes 1-6 listed below

Configuration		Position (note 1)								8 Position average
		1	2	3	4	5	6	7	8	
Standard – unhoused high ambient cooling system	Infinite exhaust	91.5	97.3	96.0	95.5	91.3	95.3	97.5	96.6	95.6

Sound power level, dB(A)

See notes 2-4, 7 and 8 listed below

Configuration		Octave band center frequency (Hz)									Overall sound power level
		31.5	63	125	250	500	1000	2000	4000	8000	
Standard –unhoused high ambient cooling system	Infinite exhaust	69.8	101.1	106.5	111.4	117.0	117.7	111.5	115.6	118.4	124.6

Exhaust sound power level, dB(A)

See note 2 and 9 listed below

Open exhaust (no muffler) @ rated load	Octave Band Center Frequency (Hz)									Overall sound power level
	31.5	63	125	250	500	1000	2000	4000	8000	
	89.8	111.1	120.9	124.3	125.8	124.2	127.0	125.3	119.8	133.0

Note:

1. Position 1 faces the generator front per ISO 8528-10. The positions proceed around the generator set in a counter-clockwise direction in 45° increments. All positions are at 7 m (23 ft) from the surface of the generator set and 1.2 m (48 in) from floor level.
2. Sound levels are subject to instrumentation, measurement, installation and manufacturing variability.
3. Data based on full rated load. Sound data with remote-cooled generator sets are based on rated loads without cooling fan noise.
4. Sound data for generator set with infinite exhaust do not include exhaust noise.
5. Sound pressure levels are measured per ANSI S1.13 and ANSI S12.18, as applicable.
6. Reference sound pressure is 20 µPa.
7. Sound power levels per ISO 3744 and ISO 8528-10, as applicable.
8. Reference power = 1 pw (10^{-12} W).
9. Exhaust sound power levels are per ISO 6798, as applicable.

Exhaust emission data sheet
2500DQKAN
60 Hz Diesel generator set
EPA NSPS stationary emergency

Engine information:

Model:	Cummins Inc. QSK60-G19 NR2	Bore:	6.25 in. (159 mm)
Type:	4 Cycle, 60° V, 16 cylinder diesel	Stroke:	7.48 in. (189 mm)
Aspiration:	Turbocharged and low temperature after-cooled (2 pump/2 loop)	Displacement:	3673 cu. in. (60.1 liters)
Compression ratio:	14:5:1		
Emission control device:	Turbocharged with low temperature after-cooler		

Performance data	**1/4 Standby**	**1/2 Standby**	**3/4 Standby**	**Full Standby**
BHP @ 1800 RPM (60 Hz)	910	1820	2730	3640
Fuel consumption (Gal/Hr)	50.6	91.1	133.6	173.1
Exhaust gas flow (CFM)	6482.0	10902.0	15122.0	18269.0
Exhaust gas temperature (°F)	849.0	939.0	981.0	1022.0
Exhaust emission data				
HC (Total unburned hydrocarbons)	0.15	0.08	0.05	0.04
NOx (Oxides of nitrogen as NO2)	3.76	3.90	4.43	6.12
CO (Carbon monoxide)	0.81	0.52	0.63	0.75
PM (Particular matter)	0.17	0.09	0.10	0.10
SO2 (Sulfur dioxide)	0.005	0.005	0.005	0.004
Smoke (Bosch)	0.70	0.50	0.57	0.60

All values are Grams per HP-Hour

Test conditions

Data is representative of steady-state engine speed (± 25 RPM) at designated genset loads. Pressures, temperatures, and emission rates were stabilized.

Fuel specification:	ASTM D975 No. 2-D diesel fuel with ULSD, and 40-48 cetane number.
Fuel temperature	99 ± 9 °F (at fuel pump inlet)
Intake air temperature:	77 ± 9 °F
Barometric pressure:	29.6 ± 1 in. Hg
Humidity:	NOx measurement corrected to 75 grains H2O/lb dry air
Reference standard:	ISO 8178

The NOx, HC, CO and PM emission data tabulated here are representative of test data taken from a single engine under the test conditions shown above. Data for the other components are estimated. These data are subjected to instrumentation and engine-to-engine variability. Field emission test data are not guaranteed to these levels. Actual field test results may vary due to test site conditions, installation, fuel specification, test procedures and instrumentation. Engine operation with excessive air intake or exhaust restriction beyond published maximum limits, or with improper maintenance, may results in elevated emission levels.

2023 EPA Tier 2 Exhaust Emission Compliance Statement 2500DQKAN Stationary Emergency

60 Hz Diesel generator set

Compliance Information:

The engine used in this generator set complies with Tier 2 emissions limit of U.S. EPA New Source Performance Standards for stationary emergency engines under the provisions of 40 CFR 60 Subpart IIII when tested per ISO8178 D2.

Engine Manufacturer:	Cummins Inc.
EPA Certificate Number:	PCEXL060.AAD-001
Effective Date:	04/13/2022
Date Issued:	04/13/2022
EPA Engine Family (Cummins Emissions Family):	PCEXL060.AAD

Engine information:

Model:	QSK60-G19 NR2	Bore:	6.25 in. (159 mm)
Engine Nameplate HP:	3640	Stroke:	7.48 in. (190 mm)
Type:	4 cycle, 60°V, 16 Cylinder Diesel	Displacement:	3673 cu. in. (60.2 liters)
Aspiration:	Turbocharged and Low Temperature Aftercooled (2P/2L)	Compression Ratio:	14.5:1
Emission control device:	Electronic Control		

Diesel Fuel Emissions Limits

D2 Cycle Exhaust Emissions

	Grams per BHP-hr			Grams per kW_m-hr		
	NO_X + NMHC	CO	PM	NO_X + NMHC	CO	PM
EPA Emissions Limit	4.8	2.6	0.15	6.4	3.5	0.20

Test methods: EPA emissions recorded per 40 CFR Part 60, 89, 1039, 1065 and weighted at load points prescribed in the regulations for constant speed engines.

Diesel fuel specifications: Cetane number: 40-50. Reference: ASTM D975 No. 2-D, 300-500 ppm Sulfur.

Reference conditions: Air inlet temperature: 25°C (77°F), Fuel inlet temperature: 40°C (104°F). Barometric pressure: 100 kPa (29.53 in Hg), Humidity: 10.7 g/kg (75 grains H2O/lb) of dry air; required for NOx correction, Restrictions: Intake restriction set to a maximum allowable limit for clean filter; Exhaust back pressure set to a maximum allowable limit.

Tests conducted using alternate test methods, instrumentation, fuel or reference conditions can yield different results.

Engine operation with excessive air intake or exhaust restriction beyond published maximum limits, or with improper maintenance, may result in elevated emission levels.

Prototype Test Support (PTS)
60 Hz test summary

Generator set models	Representative prototype	
2500DQKAN	Model:	2500DQKAN
	Alternator:	LVSI804X
	Engine:	QSK60-G19

The following summarizes prototype testing conducted on the designated representative prototype of the specified models. This testing is conducted to verify the complete generator set electrical and mechanical design integrity.

Prototype testing is conducted only on generator sets not sold as new equipment.

Maximum surge power: 2568 kW

The generator set was evaluated to determine the stated maximum surge power.

Torsional analysis and testing:

The generator set was tested to verify that the design is not subjected to harmful torsional stresses in excess of 2500 psi. A spectrum analysis of the transducer output was conducted over the speed range of 1350 to 1860 RPM.

Cooling system: Enhanced high ambient 0.50 in H2O restriction

The cooling system was tested to determine ambient temperature and static restriction capabilities. The test was performed at full rated load elevated ambient temperature under static restriction conditions.

Durability:

The generator set was subjected to endurance test replicating field duty cycles operating at variable load up to the standby rating based upon MIL-STD-705 to verify structural soundness and durability of the design.

Electrical and mechanical strength:

The generator set was tested to several single phase and three phase faults to verify that the generator can safely withstand the forces associated with short circuit conditions. The generator set was capable of producing full rated output at the conclusion of the testing.

Steady state performance:

The generator set was tested to verify steady state operating performance. It was within the specified maximum limits.

Voltage regulation:	± 0.5%
Random voltage variation:	± 0.5%
Frequency regulation:	Isochronous
Random frequency variation:	± 0.25%

Transient performance:

The generator set was tested with the listed alternator to verify single step loading capability as required by NFPA 110. Voltage and frequency response on load addition or rejection were evaluated. The following results were recorded at 0.8 power factor:

Full load acceptance:

Voltage dip:	41.9%
Recovery time:	6.1 seconds
Frequency dip:	12.0%
Recovery time:	6.8 seconds

Full load rejection:

Voltage rise:	16.0%
Recovery time:	3.6 seconds
Frequency rise:	4.8%
Recovery time:	2.4 seconds

All data based on 0.8 power factor:

Harmonic analysis:

(per alternator LVSI804X, MIL-STD-705B, method 601.4)

	Line to Line		Line to Neutral	
Harmonic	No load	Full load	No load	Full load
3	0.06	0.18	0.06	0.08
5	0.86	1.20	0.87	1.24
7	0.72	1.96	0.76	1.96
9	0	0	0	0
11	0.39	0.65	0.40	0.64
13	0.13	0.48	0.14	0.46
15	0	0	0	0

SECTION 3
GENERATOR ACCESSORIES

Specification Sheet

Battery Charger

A048G602 10 A 50/60 Hz
A051H785 20 A 50/60 Hz

Description

Cummins® fully automatic battery chargers are constant voltage/constant current chargers incorporating a 4-stage charging algorithm. Designed for use in applications where battery life and reliability are important; these chargers, complete with built-in equalize charge capability, are ideal for stationary or portable starting battery charging service.

To achieve optimum battery life, a 4-stage charging cycle is implemented. The four charging stages are constant current, high-rate taper charge, finishing charge, and maintaining charge. During the constant current cycle, the charger operates at maximum possible output in the fast charge mode. During the high-rate taper charge cycle the charger stays at fast charge voltage level until battery current acceptance falls to a portion of the chargers rated output. During the finishing charge cycle the charger operates at the float voltage and completes the battery charge. During the maintaining charge cycle the charger supplies only a few milliamps required by the battery to stay at peak capability.

An optional temperature sensor (A043D534) may be used to adjust charging voltage based on temperature of the battery. Use of a battery temperature sensor helps to increase battery life by preventing over or under charging. The battery temperature sensor also protects the battery from overheating. Temperature compensation sensor is required for all applications when battery charger and battery are located in different temperature or battery heater is being used.

Battery chargers are field-configurable for charging either 12 or 24 VDC battery systems at 50/60 Hz operation. Simple jumper selectors enable selection of output voltage and battery type.

Features

Protection – Surge protected to IEEE and EN standards. All models include single pole cartridge type fuses mounted on the printed circuit board to protect against input or output overcurrent.

Easy Installation – Clearly marked terminal blocks and panel knockouts provide convenient connections of input and output leads.

User Display – Output voltage and current, fault information and status are indicated on the front panel. Includes precision ammeter and voltmeter.

Monitoring – Status LED indicators are provided to show the condition of the charger. LED's on the right side of the monitor indicate operational functions for Temperature Compensation active (Green), AC on (Green), Float (Green) or Boost (Amber) mode, as well as Battery Fault (Red). LED's on the left side of the monitor illuminate (in Red) when Charger fail, High or Low VDC or AC fail occur.

Adjustable Float Voltage – Float voltage can be set, using easy to understand jumpers, for optimum battery performance and life.

Construction – NEMA-1 (IP20) corrosion resistant aluminium enclosure designed for wall mounting.

Faults – The charger senses and annunciates the following fault conditions: AC power loss, battery overvoltage, battery under voltage, battery fault conditions and charger failure. Includes an individual 30 volt/2-amp isolated contact for each alarm.

Vibration Resistant Design – complies with UL991 class B vibration resistance requirements.

Listed – C-UL listed to UL 1236 CSA standard 22.2 No 107.2-M89. Suited for flooded and AGM lead acid and NiCd batteries in generator set installations.

Warranty – 5 year CPG warranty.

©2022 Cummins Inc. | NAAC-5602-EN PDA059Y464 (03/22)

Status and Fault LED

Field Selectable Jumper

Specifications

Performance and Physical Characteristics

Output:	Nominal voltage	12VDC* or 24VDC
	Float voltage – 12VDC batteries	12.87, 13.08, 13.31, 13.50*, 13.62, 14.30
	Float voltage – 24VDC batteries	25.74, 26.16, 26.62, 27.00*, 27.24, 28.60
	Equalize-voltage	6.5% above float voltage sensing
	Output voltage regulation	±0.5% (1/2%) line and load regulation
	Maximum output current	10 or 20 amps nominal
	Equalize charging	Battery interactive auto-boost
Input:	Voltage AC	120, 208, 240 ±10%
	Frequency	60/50 Hz +5%
Approximate net weight:		10A: 25 lbs. (11.36 Kg) 20A: 50 lbs. (22.68 Kg)
Approximate dimensions: height x width x depth-in		10A: 12.50" x 7.66" x 6.50"(318 x 195 x 165 mm) 20A: 13.06" x 13.95" x 6.83"(332 x 354 x1 73 mm)
Ambient temperature operation: At full rated output -		- 4 °F to 104 °F (-20 °C to 40 °C)

Note:

1. Battery charger comes with default settings of 12VDC and 13.50/27.00VDC float voltage and can be changed to the battery manufacture recommendations. Replacement printed circuit board and f uses are identified in the Owner's Manual (10A: A050S537 and 20A: A051X126) which resides in Quick Serve On-Line. Service parts can be purchased through the Memphis Distribution Center. The PC board replacement instruction sheet (10A: A052N073, 20A: A053W929) and service manual (A050D829) is also available.
2. Installation and application must comply with "section 4.5.3 batteries and battery charger" of application guide T-030 (Liquid Cooled Generator Set Application Manual A040S369).

Caution:

1. Higher input voltages (i.e. 480VAC or 600VAC) can be applied if a transformer with a 120VAC-240VAC output is installed. Higher input voltages (i.e. 480VAC or 600VAC) can be applied if a transformer with a 120VAC-240VAC output is installed. For voltages higher than 240 VAC, stepdown transformer must be used. Review the respective Owner/Installation manual A050S537 for 10Amp and A051X126 20A chargers for supplier recommended stepdown transformer requirements.
2. 10Amp battery charger is recommended for genset applications with 1 or 2 factory provided batteries. 20Amp battery charger is recommended for Cummins Genset applications with 3 or 4 factory provided batteries. Please consider the auxiliary DC loads connected to the genset batteries and size this charger as per the T-030 application guide to prevent misapplication issues.
3. Back feed to a utility system can cause electrocution and/or property damage. Do not connect generator sets to any building electrical system except through an approved device or after building main switch is open.
4. For professional use only. Must be installed by a qualified service technician. Improper installation presents hazards of electrical shock and improper operation, resulting in severe personal injury and/or property damage.
5. Use this charger for charging LEAD-ACID or LIQUID ELECTROLYTE NICKEL-CADMIUM batteries only. Do not use this battery charger for charging dry cells, alkaline, lithium, nickel-metal hydride, or sealed nickel-cadmium batteries that are commonly used with home appliances. These batteries may burst and cause injuries to persons and damage to property.
6. Do not parallel these battery chargers with any other charging system.

For more information contact your local Cummins distributor or visit power.cummins.com

Our energy working for you.™

©2022 Cummins Inc. All rights reserved. Cummins is a registered trademark of Cummins Inc. PowerCommand, AmpSentry, InPower and "Our energy working for you." are trademarks of Cummins Inc. Other company, product, or service names may be trademarks or service marks of others. Specifications are subject to change without notice.
NAAC-5602-EN PDA059Y464 (03/22)

SECTION 4

GENERATOR DRAWINGS AND INTERCONNECTS

GLOBAL POWER COMPONENTS™

Submittal Date: 10/27/2023

Project Name: CDSG Infinity

Company Name: Cummins

Job Number: 39664

Table of Contents:

Section 1: Bill of Materials

Section 2: Enclosure Components

Section 3: Tank Components

Section 4: Mechanical Drawings

Section 5: Electrical Schematics

Section 6: Enclosure Color Chart

Section 7: Warranty Statement

Bill of Materials

Section 1

EVERYTHING BUT THE GENERATOR™
• Genset Enclosures • Equipment Centers • Fuel Tanks • Trailers • Iso Containers •

QUOTE

COMPANY: CUMMINS NORTH

PROJECT NAME: Budget

CONTACT NAME: Josh King

EMAIL: josh.king@cummins.com

QUOTE #: 857899-03

DATE: 10/26/2023

GEN MODEL: 2500DQKAN

GEN/SET FOOTPRINT: 277.7"L x 106.8"W

Qty	Part #	Description
		GPC Weatherhouse Enclosure Model GWE-G2-2500-LB- 3750
1	GWE-G2	GPC Weather House Enclosure Level Two Sound Attenuated 14 Gauge Galvannealed Construction Enclosure to Reduce 20-25dBA at 23', Average of 8 Readings, Free Field Environment
7	6505	Hinged Door
7	6501	Stainless Steel Door Hardware (Pad-Lockable)
7	6508	Panic Hardware
7	6507	Stainless Steel Door Restraint
1	6610	External Intake Hood
1	6615	Internal Vertical Discharge Plenum
1	6522	Insulated w/3" Insulation Board
1	6520	Perforated Interior Lining
1	Green	Paint Color Onan Green (41515)
		Options Included
1	6982	LED Fixture (4' Vapor Tight)
1	6914	100A DIST PANEL (120/240V OR 120/208V, 1 PHASE)
1	6905	(2) 3 Way Light Switches
1	6916	GFCI Outlet (20A)
1	6918	GFCI PROTECTED OUTLET (20A)
1	6518E	Extend Fumes Disposal to Exterior of EnclosureExtend Oil & Coolant Drains to Exterior (Generator Set to be Supplied w/Valves)
		Customer Supplied Options
1	6902	Wire Customer Supplied Block Heater
1	6904	Mount and Wire Customer Supplied Battery Charger
1	Special	Install Customer Supplied Fleet Guard

Qty	Part #	Description
		Exhaust System
1	6843	GPC Supplied Exhaust System (GPC Supplied Flex)
1	6855	Internally Mounted Silencer
1	6805	Rain Collar
1	6870	Vertical Silencer Discharge (Includes Elbow and Rain Cap - Ships Loose)
		Lift Base
1	6515	Generator Set & Enclosure Mounting Frame
10	8304	8" I-Beam Generator Set Support
18	8420	Isolator Pad Support Plate
1	8320	Diamond Plate Top Cover
8	8416	3/4" Gusset Lift Provision
1	Black-Gloss	Paint Color Gloss Black (9638)
1	Install Lift Base	Mount Generator Set & Enclosure to Lift Base
		Options Included
2	3193	Extra Fitting w/Plug (1" NPT) for Oil and Coolant Drains
18	8426	GPC to Provide Isolators
		UL-142 Listed Sub Base Fuel Tank Model SB2N-3750 Usable Gallons (24HRS)
1	DW-101	Double Wall Secondary Containment
1	4001	Notched Electrical Stub Up Area
1	8002	Removable Stub Up Access Panel
1	3660	1" Supply/Return Dip Tube Package (2" NPT)
1	1000	Low Level Alarm (2" NPT, Set at 50%)
1	3502	Basin Drain, 1/2" NPT
1	1003	Rochester Fuel Level Gauge (2" NPT, Swing Arm)
1	3005	Locking Manual Fill Cap (2" NPT)
1	3152	Standard Vent Cap (2" NPT)
4	3166	Emergency Vent (6" NPT)
4	8410	Flush Mount Lifting Plate (Minimum of 4)
1	Black-Gloss	Paint Color Gloss Black (9638)
		Options Included
1	4300	Fuel in Basin Alarm (2" NPT, Top Mounted)
1	1010	High Level Alarm (2" NPT, Set at 90%)
1	1020	Critical High Level Alarm (2" NPT, Set at 95%)
1	8200	5 Gallon Spill Containment (Tank Mount)
1	3190	Extra Fitting w/Plug (3/8" NPT)
1	700-1075	Spring Check Valve, 1" NPT Installed on engine supply line

Qty	Part #	Description
4	3195	Extra Fitting w/Plug (2" NPT)
1	3520	Rain RUNOFF™ Option
1	AFP4	Alarm Fill Panel for Leak, Low, High and Critical High Nema 3R, Relays, DC or AC
1	AFP4I	Mount & Wire Alarm Panel by Fill

Lead Time
Please Contact Global Power Components for Available Lead Time at Time of Order Release

Notes and Clarifications
No sound attenuating materials included, enclosure designed for weather protection only.

No spec at time of quote.

Based on unit drawing A054H274

See adder platforms / stairs.

Pricing is based on genset in 2025

Customer Supplied Components
Generator w/ Side facing beaker and Controller
Battery Charger
Batteries w/Rack & Cables
Fleet Guard

Ship Loose Items
Elbow and Rain Cap

	Quantity	Unit Price EACH	Price TOTAL
	2		

rev 1 updated to Level 2 removed 3000amp breaker and added afp4
Rev 2: Update to QTY 2
Rev 3 Updated quote to match dwgs

Best Regards,
Cindy Victoria
Account Manager
cvictoria@globalpowercomponents.com
Office: 414-475-3009
Cell: 414-687-7752

Payment Terms:
Applicable taxes are not included in quotation price. Standard terms are net twenty (20) days. Final terms are subject to credit review and size of order after PO is submitted. Progress terms may be required. Payments not made within thirty (30) days will accrue interest at a rate of 1.25% per month, calculated on the 1st and 15th of each month. Purchaser responsible for Attorney's or Collection Fee's if payment not made within above terms. Due to fluctuating commodity prices, this quotation is firm for Thirty (30) days, with Release for Production taking place no later than fourteen (14) days from receipt of Purchase Order. Acceptance of the quotation constitutes your agreement of these terms.

Declared Value of Buyer's Goods:
If Seller arranges and procures the transportation of goods, Buyer is required to state in its Purchase Order the Declared Value of any equipment to be enclosed in the final product.

Collect on Delivery Passthrough Fees
Any agreement to pay Collect on Delivery fees for customer or third-party equipment, e.g., generator, included in this quotation is limited exclusively to the payment of fees on behalf of Customer. We take no responsibility for the arrangement or contracting of delivery or storage of customer equipment. Any effort to coordinate the timing of your delivery with our ability to receive equipment does not represent control. Control shall not pass prior to the physical receipt and possession of equipment at our manufacturing facility.

The terms and conditions found at https://www.globalpowercomponents.com/terms-and-conditions-links.html apply to the sale of any goods or services covered by Global Power Components Quotation.

QuotForm:001:00

Enclosure Components

Section 2

Product data sheet
Characteristics

QO120M100
LOAD Center QO MB 240V 100A 1PH 20SP

Product availability : Stock - Normally stocked in distribution facility

Main

Product or component type	Load Center
Range of product	QO
Load center type	Main breaker
Line Rated Current	100 A
Number of spaces	20
Short-circuit current	22 kA
Number of circuits	20
Number of tandem circuit breakers	0
Phase	1 phase
System Voltage	120/240 V AC

Complementary

AWG gauge	AWG 6...AWG 1 (aluminium/copper)
NEMA degree of protection	NEMA 1 indoor
Cover type	Order separately
Electrical connection	Lugs
Device composition	Grounding bar (ordered separately)
Electrical connection	Lugs
Wiring configuration	3-wire
Material	Tin plated copper busbar
Enclosure material	Welded sheet steel
Surface finish	Baked enamel grey
Box number	6
Product certifications	UL listed
Height	17.91 in (455 mm)
Width	14.25 in (362 mm)

Disclaimer: This documentation is not intended as a substitute for and is not to be used for determining suitability or reliability of these products for specific user applications

Ordering and shipping details

Category	00001 - QO 1PH LC,12-42 CKT,NEMA1
Discount Schedule	DE3A
GTIN	00785901847878
Nbr. of units in pkg.	1
Package weight(Lbs)	11.73
Returnability	Y
Country of origin	US

Offer Sustainability

RoHS (date code: YYWW)	Compliant - since 1248 - Schneider Electric declaration of conformity Schneider Electric declaration of conformity
REACh	Reference not containing SVHC above the threshold Reference not containing SVHC above the threshold
Product end of life instructions	Need no specific recycling operations
California proposition 65	WARNING: This product can expose you to chemicals including:
- - - - - - - Substance 1	Lead and lead compounds which is known to the State of California to cause cancer and birth defects or other reproductive harm.
- - - - - - - More information	For more information go to www.p65warnings.ca.gov

Contractual warranty

Warranty period	18 months

SYLVANIA

LEDVANCE Luminaires

Vapor Tight

Catalog #	Type
Project	
Notes	
Date	
Prepared by	

Dimensions

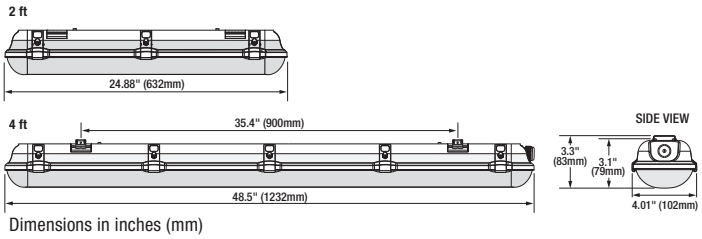

Dimensions in inches (mm)

Product Features

The Vapor Tight luminaires are environmentally preferable LED alternatives to traditional HID or fluorescent luminaires, offering up to 67% in energy savings. Ideal in place of traditional luminaires, or as new installations, the Vapor Tight series is suitable for illuminating garages, stairwells, industrial areas, canopies, and outdoor walkways.

The Vapor Tight luminaires are IP65 rated and are offered with integrated sensor and emergency backup options. LEDVANCE luminaires assure optimum light engine performance for extended service and rated life (≥66,000 hours L_{70}).

Wattage Comparison Chart

Vapor Tight

Traditional Source	Traditional System Wattage	LED System Wattage	Energy Savings
2 F17T8	33	25	24%
2 F32T8	27	25	7%
50W HPS	62	25	60%
70W HPS	92	25	67%
2 F28 T8	50	40	20%
2 F32 T8	54	40	26%
1 F96 T12	86	40	53%
70W HPS	91	40	56%
2 F28 T8	50	50	0%
2 F32 T8	54	50	7%
1 F96 T12	86	50	42%
70W HPS	91	50	45%

Specifications

Weight: 2 ft: 2.5 lbs. (1.2 kg)
4 ft: 4.8 lbs (2.2 kg) Standard 5.5 lbs (2.5 kg) Emergency
5.1 lbs (2.3 kg) Sensor 5.8 lbs (2.6 kg) Sensor and Emergency

Construction: One-piece polycarbonate housing with one-piece polycarbonate lens and stainless steel clips. The standard color is gray.

LED System: LED system with a life rating of ≥66,000 hours (UNV) and ≥84,000 hours (HUV) at L_{70} @25°C. Luminaire efficacy up to 140 LPW.

Electrical: Offered in 25, 40 and 50 Watts, the luminaire is designed to operate through the 120V-277VAC universal voltage and 347-480VAC high universal voltage range. The LED driver has a 2.5kV inherent surge suppression and is a constant current device, meeting UL1310 and UL48 Class 2 with built-in over temperature protection. The power factor is ≥90% and THD is ≤20%.

Dimming: The driver is 0-10V dimmable (down to 6%). Please reference the dimmer compatibility document (LEDLUM012).

Color Characteristics: CRI>80; CCT of 4000K or 5000K.

Optics: Type V distribution with a clear etched polycarbonate lens.

Installation: Luminaire mounts to recessed outlet box or can be surface or chain mounted (chain not included). Connector available for tandem wiring. External controls can be added through existing knockouts.

Operating Temperature: -40°F to +104°F (-40°C to +40°C);
EM: +14°F to +104°F (-10°C to +40°C).

Listings: cULus listed to UL1598 standards for wet locations and IP65 rated.

Warranty: Standard 5-year luminaire warranty (LEDLUM001).

Note: Specifications subject to change without notice. IES files available online.

*DLC Premium only applicable to 25W and 40W versions with clear lens option

Ordering Guide

Item Number:

VAPOR	XX /	XXX	XXX	D	8	XX /	XX	EC /	GR /	XX
Product Name	Generation	Wattage	Voltage	Dimming	CRI	Color Temp (CCT)	Size	Optics	Color/Finish	Options
VAPOR	1A	025 = 25 Watts	UNV = 120-277V	D = 0-10V	8≥80	40 = 4000K	24 = 24" long	EC = Etched Lens	GR = Gray	Blank = No Option
	1B	040 = 40 Watts	HUV = 347-480V*			50 = 5000K	48 = 48" long	Type V Distribution		D = Motion/Daylighting Sensor**
		050 = 50 Watts								E = Emergency**

*HUV version only available in 50W
**Only available on 48" UNV versions

Photometric Data

VAPOR1A/025UNVD8X0
Isofootcandle Lines at 15' Mounting Height

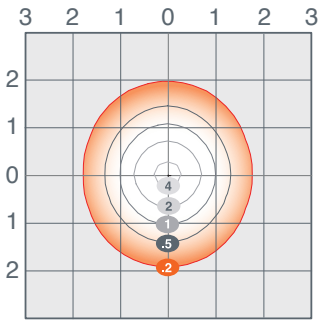

For other mounting heights apply the following multipliers:

Mounting Height	10'	12'	15'	18'	20'
Multiplier	2.25	1.56	1.00	0.44	0.36

VAPOR1A/040UNVD8X0
Isofootcandle Lines at 12' Mounting Height

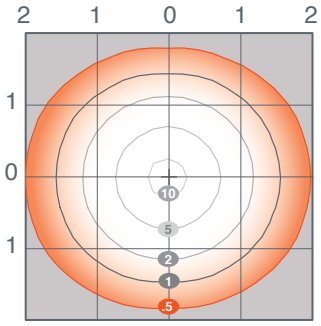

For other mounting heights apply the following multipliers:

Mounting Height	8'	10'	12'	15'	16'	18'
Multiplier	2.25	1.44	1.00	0.73	0.56	0.44

Fixture Spacing Chart

	VAPOR1A/025UNVD840/48EC/GR			VAPOR1B/040UNVD840/48EC/GR		
	On Center Fixture Spacing			On Center Fixture Spacing		
	8'x10'	10'x10'	10'x12'	8'x10'	10'x10'	10'x12'
8'	39	29	23.2	65.6	51.2	40.2
10'	37.9	28.1	22.5	63.6	49.9	39.2
12'	35.2	27.3	21.9	63.4	48.3	38.1
14'	34.2	26.6	21.3	61.7	47.3	37.2
16'	33.2	25.6	20.7	55.5	46.3	36.2
18'	32.3	24.9	20.1	53.9	44.7	35.3

Average Illuminance (fc) at 0" AFF.
80/50/20 reflectances.

Ordering Information

Item Number	Ordering Abbreviation	Power (W)	Input Voltage	Dimming	CRI	Color Temp (CCT)	Total Fixture Lumens Clear Lens	Total Fixture Lumens Diffuse Lens	LPW* Clear Lens	LPW* Diffuse Lens	DLC** Clear Lens	DLC** Diffuse Lens	Options
74530	VAPOR1A/025UNVD840/24EC/GR	25	120-277V	0-10V	>80	4000K	3100	2800	135	121	Prm	Std	–
74531	VAPOR1A/025UNVD850/24EC/GR	25	120-277V	0-10V	>80	5000K	3100	2800	137	123	Prm	Std	–
74222	VAPOR1A/050UNVD840/48EC/GR	50	120-277V	0-10V	>80	4000K	5000	–	102	–	–	–	–
74223	VAPOR1A/050UNVD850/48EC/GR	50	120-277V	0-10V	>80	5000K	5000	–	103	–	–	–	–
74224	VAPOR1A/050UNVD840/48EC/GR/D	50	120-277V	0-10V	>80	5000K	4000	–	102	–	–	–	Sensor
74225	VAPOR1A/050UNVD850/48EC/GR/D	50	120-277V	0-10V	>80	5000K	5000	–	103	–	–	–	Sensor
74227	VAPOR1A/050UNVD850/48EC/GR/E	50	120-277V	0-10V	>80	5000K	5000	–	103	–	–	–	Emergency
74229	VAPOR1A/050UNVD850/48EC/GR/DE	50	120-277V	0-10V	>80	5000K	5000	–	103	–	–	–	Sensor, Emergency
74552	VAPOR1A/050HUVD840/48EC/GR	50	347-480V	0-10V	>80	4000K	5700	–	111	–	Std	–	–
74553	VAPOR1A/050HUVD850/48EC/GR	50	347-480V	0-10V	>80	5000K	5700	–	111	–	Std	–	–
74376	VAPOR1B/040UNVD840/48EC/GR	40	120-277V	0-10V	>80	4000K	5300	4600	139	120	Prm	Std	–
74377	VAPOR1B/040UNVD850/48EC/GR	40	120-277V	0-10V	>80	5000K	5300	4700	137	122	Prm	Std	–
74378	VAPOR1B/040UNVD840/48EC/GR/D	40	120-277V	0-10V	>80	4000K	5400	4500	140	116	Prm	Std	Sensor
74379	VAPOR1B/040UNVD850/48EC/GR/D	40	120-277V	0-10V	>80	5000K	5400	4600	137	119	Prm	Std	Sensor
74554	VAPOR1B/040UNVD840/48EC/GR/E	40	120-277V	0-10V	>80	4000K	5300	4600	139	120	Prm	Std	Emergency
74555	VAPOR1B/040UNVD850/48EC/GR/E	40	120-277V	0-10V	>80	5000K	5300	4700	137	122	Prm	Std	Emergency
74556	VAPOR1B/040UNVD840/48EC/GR/DE	40	120-277V	0-10V	>80	4000K	5400	4500	140	116	Prm	Std	Sensor, Emergency
74557	VAPOR1B/040UNVD850/48EC/GR/DE	40	120-277V	0-10V	>80	5000K	5400	4600	137	119	Prm	Std	Sensor, Emergency

*LPW per LM79 report.
**Prm for DLC Premium; Std for DLC Standard
For further information and to learn more about utility rebates, contact your local SYLVANIA sales representative.

Options Information

Sensor: Motion and Daylight sensors are both available.

Motion Sensor (Default Setting):

Motion	100% lumen output
≥5min with no motion	30% lumen output
≥30min with no motion	Off

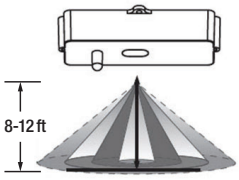

Height of Installation: 8-12 ft

Detection Range
Height of installation: 8 ft

Daylight (Default Setting): 5fc/24H

For customized settings: Purchase remote control separately and refer to the Vapor Tight Remote document LEDLUM015 for further instructions.

Emergency Battery Backup:

Activates when normal power supply to the fixture fails, providing a minimum of 500 lumens for at least 90 minutes.

Accessories and Replacement Parts

Item Number	Ordering Abbreviation	Item Description
74310	VAPOR1A/REMOTE	Vapor Tight Sensor Remote compatible with VAPOR1A
74541	VAPOR1B/REMOTE	Vapor Tight Sensor Remote compatible with VAPOR1B
74744	VAPOR1X/LENS/24D5	2ft Diffused Lens
74538	VAPOR1X/LENS/48D5	4ft Diffused Lens
74448	VAPOR1A/LENS/48EC	4ft Replacement Lens
74920	VAPOR1A/CONN/BL	Tandem Wiring Connector

LEDVANCE LLC
200 Ballardvale Street
Wilmington, MA 01887 USA
Phone 1-800-LIGHTBULB (1-800-544-4828)
www.sylvania.com

SYLVANIA and LEDVANCE are registered trademarks.
All other trademarks are those of their respective owners.
Licensee of product trademark SYLVANIA in general lighting.
Specifications subject to change without notice.

/sylvania /sylvania

© 2017 LEDVANCE LLC

Switches, Three Way
20A, 120-277V AC
Specification Grade Commercial Switch

HUBBELL

Features

- Thread cleaning captive mounting screw
- Abuse resistant nylon toggle
- Steel, zinc plated bridge is corrosion resistant

Ordering Information

Description	Toggle Color	UPC	Catalog Number
Toggle, back and side wired	Ivory	783585154220	CSB320I

Listings

UL Listed
CSA Certified
Fed. Spec. W-S-896

Specifications

Top Material	Thermoplastic, Gray
Base Material	Thermoplastic, Black
Toggle Material	Nylon
Contacts	Silver Alloy
Terminal Screws	Brass
Auto Grounding Mounting Bridge	Zinc Plated Steel
Ground Screw	Brass (Green)

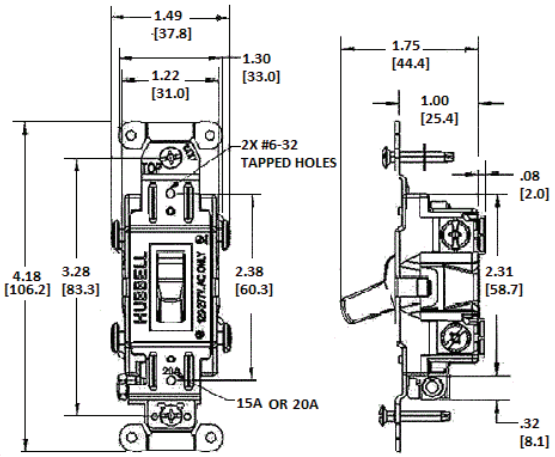

Performance

Electrical

Dielectric Voltage	Withstands 1500V AC minimum for 1 minute
Max. Continuous Current	20A
Max. Working Voltage	277V AC
Overload	Minimum 4.8 times rated current for 100 cycles
Temperature Rise	30°C maximum at rated current

Mechanical

Terminal Accommodations	#14 AWG min. - #10 AWG max. solid and stranded copper wire only

Environmental

Flammability	UL 94V-2
Operating Temperature	Max. continuous: 75°C; Min. continuous: -40°C without impact

Online Resources

Customer Use Drawing
eCatalog

Dimensions in Inches (mm)

Hubbell Wiring Device-Kellems • Hubbell Incorporated (Delaware) • 40 Waterview Drive • Shelton, CT 06484
Phone (800) 288-6000 • Fax (800) 255-1031 • Specifications subject to change without notice.

HUBBELL®
Wiring Device-Kellems

Ground Fault Products

Commercial Tamper-Resistant and Weather Resistant GFCI Receptacles

HUBBELL

Features

- Patented shutter design for tamper-resistant protection
- Meets NEC requirements for TR (517-18c) and WR (406.9), UV and corrosion resistance for harsh and damp applications
- Patented AUTOGUARD® self test technology
- Protects against line and load reversal, no power to the face or downstream if device is miswired

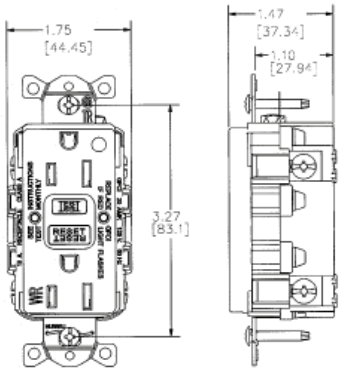

Ordering Information

Description	Color	UPC	Catalog Number
20A, 125V, Style Line®, AUTOGUARD® self test GFCI receptacle, tamper-resistant and weather resistant, flush face, back and side wired, multiple drive screws	Ivory	883778122675	GFTWRST20I

Listings

UL Listed - Canadian and U.S.
Meets ADA Standards
Meets all NEC® requirements
CSA Certified
NEMA® WD-6 Compliant

Specifications

Face	Nylon
Base	Nylon
Power Contacts	Brass
Ground Contacts	Brass
Mounting Strap	Zinc plated steel
Mounting Screws	Zinc plated steel

Online Resources

Customer Use Drawing
eCatalog
Installation Instructions

Dimensions in Inches (mm)

Hubbell Wiring Device-Kellems • Hubbell Incorporated (Delaware) • 40 Waterview Drive • Shelton, CT 06484
Phone (800) 288-6000 • Fax (800) 255-1031 • Specifications subject to change without notice.

HUBBELL® Wiring Device-Kellems

Straight Blade Devices

20A, 125V, 2 Pole, 3 Wire Grounding Commercial Specification Grade Duplex Receptacles

HUBBELL

Features

- Easy access split circuit tab
- Nylon face and base
- Wrap-around galvanized steel strap
- Triple wipe contacts

Ordering Information

Description	Device Color	UPC	Catalog Number
Smooth face, back and side wired.	Ivory	783585834887	BR20I

Listings

UL Listed to UL498 File No. E2186
Certified to CSA 22.2, No. 42
Fed. Spec. W-C-596
NEMA® WD-6 Compliant

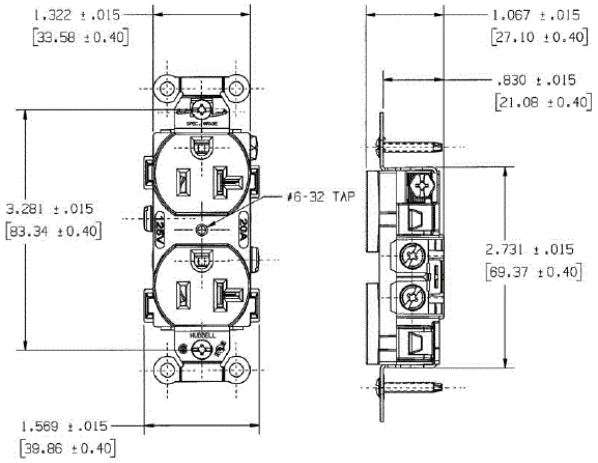

Specifications

Face	Nylon
Base	Nylon
Power Contacts	.030 in. (.8) Brass
Ground Contacts	Brass
Wire Clamp	.062 in. (1.6) Nickel plated steel
Terminal Screws	Plated steel
Mounting Strap	.040 in. (1) Galvanized steel
Automatic Self-grounding Staple	Stainless steel
Mounting Screws	Galvanized Steel

Performance

Electrical

Current Interrupting	Certified for current interrupting at full rated current
Dielectric Voltage	Withstands 2,000V minimum

Mechanical

Product Identification	Ratings are a permanent part of the device
Terminal Accommodation	#12-#10 AWG copper stranded or solid conductor only
Terminal Identification	Terminals identified in accordance with UL 498 and CSA

Environmental

Flammability	UL 94 V-2
Operating Temperatures	Maximum continuous 75°C; minimum -40°C (w/o impact)

Accessories

Wallplate or Weatherproof Cover Duplex Opening

Resources

Customer Use Drawing
eCatalog

Dimensions in Inches (mm)

Hubbell Wiring Device-Kellems • Hubbell Incorporated (Delaware) • 40 Waterview Drive • Shelton, CT 06484
Phone (800) 288-6000 • Fax (800) 255-1031 • Specifications subject to change without notice.

HUBBELL® Wiring Device-Kellems

Tank Components

Section 3

ROCHESTER GAUGES, INC.

ISO 9001 AND QS-9000 REGISTERED

Magnetic Liquid-Level Gauges

6500 Series

Magnetic Liquid-Level Guages

Application

The 6500 Series Senior™ gauges are designed for use in low pressure tanks 0-25 psig [0-1,7Bar] containing diesel fuel, gasoline, fuel oil and lubricating oils.

Used in many applications such as construction equipment, stationary generators, boats, farm equipment and home heating.

General Information & Features

The 6500 Series Senior™ gauges are available in gear-action models for top, centerline or angle mounting. In lever-action models centerline mounting is only available.

The standard float is nitrile rubber. Aluminum or stainless steel floats are available at extra cost. The gauge is mounted to a mating Senior™ flange 2 ½" bolt circle [63,5mm] using four ¼"-28 x 9/16" long screws. The gasket is Buna-N.

Model #	Action	Mounting	Dial, Sender or Switch Data
6540	Gear	Top	Senior™ TwinSite™ Sender in choice of 0-30, 0-90, or 240-30 Ohm ranges. #5002S00062 direct-reading dials may also be used.
6543		C/L or Angle	
L6543	Lever	C/L	
6550	Gear	Top	Standard switch #5023S00778 S.P.S.T., 150 VAC/50 VDC ½ Amp. Please furnish tank drawings and switch points so proper gauge and calibration can be supplied. Other switches available, see DS-364.
6553		C/L or Angle	
L6553	Lever	C/L	
6560	Gear	Top	#5025S00570 Senior™ side-reading fractional
6580			#5002S00062 Senior™ direct-reading fractional
6583		C/L or Angle	
L6583	Lever	C/L	#5002S00547 Senior™ direct-reading fractional
6583-00093	Gear	Top	#5002S00062 direct-reading fractional

Top Mounting Adjustable Liquid-Level Gauges

Model #	Mounting	Dial or Sending Data
6580-0151	Top	• #5002S01379 Senior direct-reading fractional dial • #P5880S02547 Senior TwinSite™ dial 0-90 Ohms • #P5648S02547 Senior TwinSite™ dial 240-30 Ohms

** Also available with 0-90 or 240-30 ohm sender.*

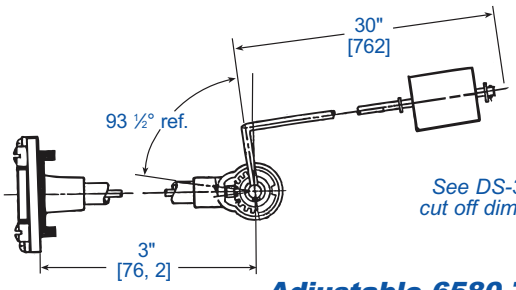

See DS-337 for cut off dimensions

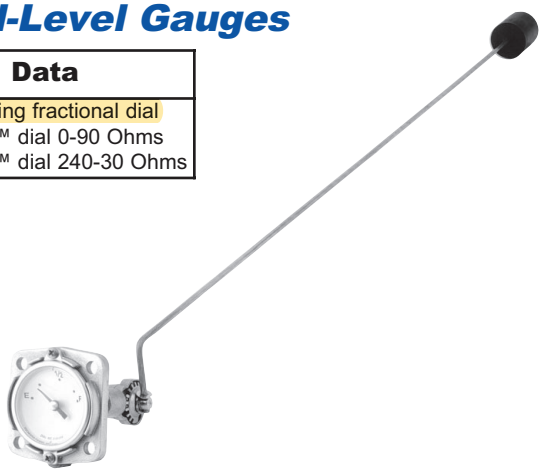

Adjustable 6580 Top Mount Gauge

10/14/04

See reverse side for dimensional data, materials of construction, performance, and advice on how to order.

The Measure of Excellence

6500 Series Magnetic Liquid-Level Gauges

Sr. Twinsite Sender

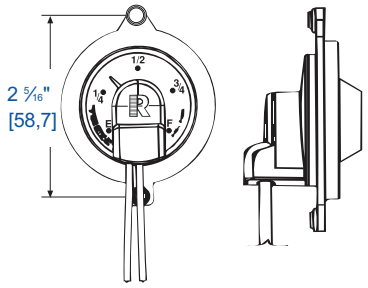

5025S00570
Sr. Side-Reading Dial

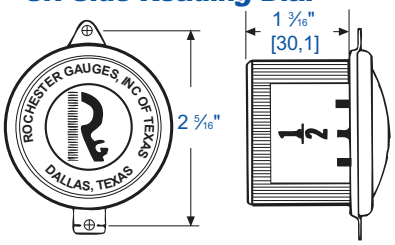

5002S00062
Sr. Direct-Reading Dial

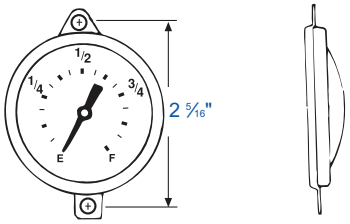

5013S00456
Standard 4" Dial

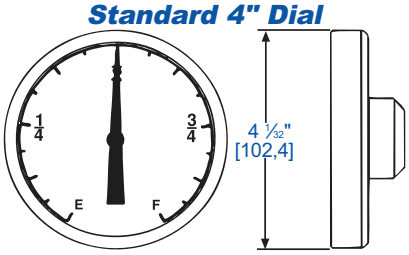

Note: This dial is used in conjunction with 93-2 mounting bracket and 39-2 bezel.

[METRIC]

Lever Action Gauge

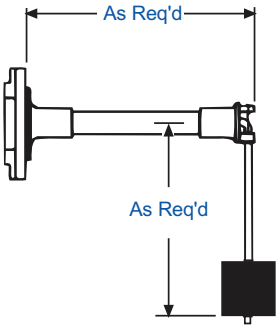

140° Standard Float Arc

Gear Action Gauge

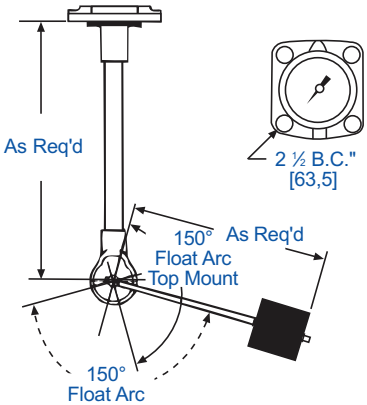

General Specifications*

Accuracy
Accuracy depends on proper sizing of gauge and tank configuration. Normally, direct-reading dials are ±3%; TwinSite™ senders are ±7%. Vibration improves accuracy.

Temperature Range
-40F to +158°F, -40 to 70C

Humidity
Paint exposed portions of gauge, less dial, for marine applications.

Shock & Vibration
Suitable for mobile applications.

Power
0.5 watts maximum for TwinSite™ versions.

Tank Pressure
Up to 50 psig [3,4Bar]

Approvals
These direct indicating gauges are UL listed for flammable liquids. Some models UL recognized for marine service.

When ordering, specify:

1. Gauge model number.
2. Tank diameter and riser height.
3. Mounting location.
4. Ohm range on TwinSite™ versions.
5. Preferred switch on switch gauges, if other than standard.
6. Any listed options or preferences.

Materials of Construction*

Head
Die cast aluminum

Centershaft, Support Tube & Float Rod
Tempered aluminum

Gears, Cross Stud & Bearings
Stainless steel

Drive Magnet
Alnico

Gear Housing
Acetal plastic

Float
Nitrile rubber

Gasket
Buna–N, 0015-00004 or 0015-00079

Direct Reading Dial
Aluminum with acrylic crystal, hermetically sealed.

Side Reading Dial
Aluminum with polycarbonate crystal, hermetically sealed.

TwinSite™ Sender
Polyamide.

Screws
Zinc-plated steel ¼"-28 x 9/16" long.

* Materials and specifications are subject to change without notice.
Pressure ratings subject to change due to temperature and other environmental considerations.

11616 Harry Hines Blvd. • P.O. Box 29242 • Dallas, TX 75229 • (972) 241-2161 • *FAX* (972) 620-1403
Website http://www.rochestergauges.com • ***E-mail*** info@rochestergauges.com

Single-Stage Switches: **Vertical Mount**

Innovative Solutions

L003 Series

Compact, Low-Cost Switches – Ideal for High Volume Use

Key Features:

- Ideal for shallow tanks
- Broad media compatibility
- Selectable to Normally-Open or Normally-Closed operation by inverting the float
- 50 VA switch (standard)

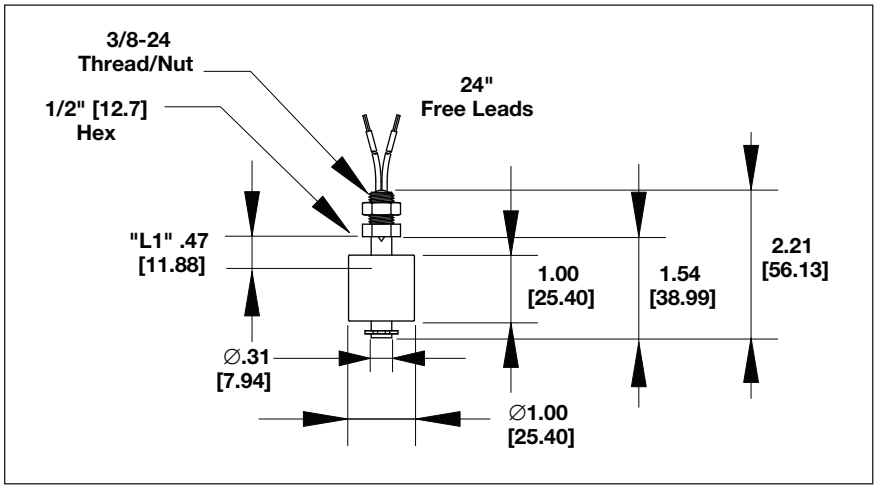

Series	Mounting	Stem/Float Materials	SG	Temperature	Pressure	P/N
L003 **Compact, Low-Cost Switches**	⅛" NPT	Solid/PP	.90	-40° to +150° F	150 PSIG	L003-0102-0303
	⅜"-24	Solid/PP	.90	-40° to +150° F	150 PSIG	L003-1802-0303
	⅛" NPT	Hollow/PP	.70	-40° to +150° F	50 PSIG	L003-0102-0203
	⅜"-24	Hollow/PP	.70	-40° to +150° F	50 PSIG	L003-1802-0203
	⅛" NPT	PVC/PVC	.90	-40° to +140° F	50 PSIG	L003-0105-0503
	⅜"-24	PVC/PVC	.90	-40° to +140° F	50 PSIG	L003-1805-0503
	⅛" NPT	PVDF/PVDF	1.0	-40° to +150° F	50 PSIG	L003-0104-0403
	⅜"-24	PVDF/PVDF	1.0	-40° to +150° F	50 PSIG	L003-1804-0403
	⅛" NPT	Nylon/Buna	.80	-40° to +150° F	150 PSIG	L003-0118-2003
	⅜"-24	Nylon/Buna	.80	-40° to +150° F	150 PSIG	L003-1818-2003

250 lb WWP Bronze Ring Check® Valves

Fire Protection Valve •Inline Lift Type • Rubber Discs • Spring Actuated

Dezincification Resistant

250 PSI/17.2 Bar Non-Shock Cold Working Pressure[u]

T-480
Threaded

CONFORMS TO MSS SP-80

MATERIAL LIST

PART	SPECIFICATION
1. Body	Bronze ASTM B 584 Alloy C84400
2. Stem	Stainless Steel ASTM A 582 Alloy C30300
3. Spring	316 Stainless Steel
4. Disc Holder	Stainless Steel Type 301
5. Disc	Water, Oil or Gas (Buna-N)
6. Seat Screw	Stainless Steel ASTM A 276 Alloy S43000
7. Body End	Bronze ASTM B 584 Alloy C84400

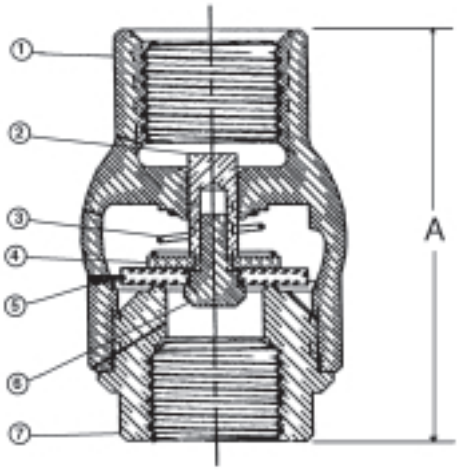

T-480
NPT x NPT

DIMENSIONS—WEIGHTS—QUANTITIES

Size		Dimensions A		Dimensions B		Dimensions C		T-480		Master
In.	mm. In.	mm.	In.	mm.	In.	mm.	In.	mm.	In.	Ctn. Qty.
⅜	10	2.00	51	1.38	35	1.44	37	0.41	0.19	100
½	15	2.06	52	1.38	35	1.19	30	0.36	0.16	100
¾	20	2.25	57	1.63	41	1.31	33	0.48	0.22	100
1	25	2.63	67	2.00	51	1.50	38	0.77	0.35	50
1 ¼	32	2.94	75	2.38	60	1.69	43	1.14	0.51	30
1 ½	40	3.31	84	2.75	70	2.00	51	1.63	0.74	30
2	50	3.69	94	3.38	86	2.31	59	2.27	1.03	10

Ordering: The T-480 has standard Buna-N Discs.
Also available with TFE (Y) Discs; specify T-480-Y.
⅜" thru 2" require ½ pound pressure to open.

NIBCO check valves may be installed in both horizontal and vertical lines with upward flow or in any intermediate position.

WARNING - Valve must be installed downstream of receiver tank if used in line with reciprocating air compressor.

Do Not Use as a Footvalve.

Warning – Do Not Use For Reciprocating Air Compressor Service.

JOB #
—

PANEL LAYOUT

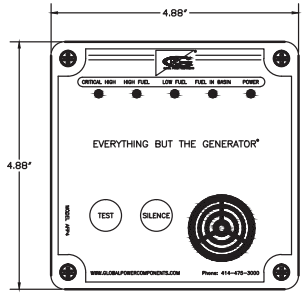

AFP4 ALARM PANEL
(FRONT VIEW)

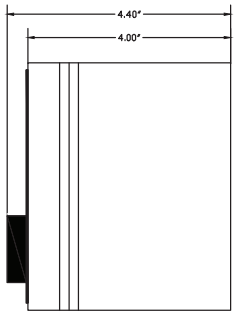

AFP4 ALARM PANEL
(SIDE VIEW)

WIRING DIAGRAM

NOTES:
* – PROVIDED BY OTHERS
———GPC WIRING
- - - - - -WIRING BY OTHERS

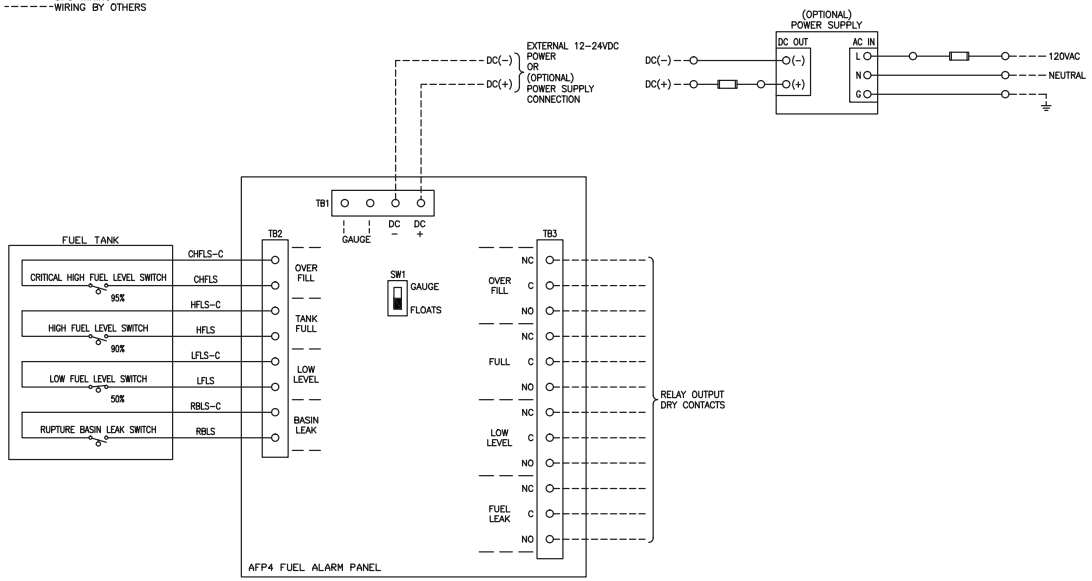

PROGRAMMING INSTRUCTIONS:

SELECT DESIRED OPERATION MODE BASED ON THE ALARM PANEL MODEL NUMBER:
MODEL# FFAFP4G → OPERATION MODE 1 (4 ALARM PANEL W/ OPTIONAL FUEL LEVEL GAUGE)
MODEL# AFP4 → OPERATION MODE 2 (4 ALARM PANEL)
MODEL# AFP2 → OPERATION MODE 3 (2 ALARM PANEL)

PROGRAM THE PANEL FOR THE DESIRED OPERATION MODE:
- VERIFY CONTROL POWER IS OFF
- HOLD DOWN THE "TEST" AND "SILENCE" PUSH BUTTONS SIMULTANEOUSLY WHILE TURNING CONTROL POWER ON
- THE "POWER" LED WILL BLINK ON AND OFF, SIGNIFYING THE PANEL IS IN PROGRAMMING MODE
- RELEASE THE "TEST" AND "SILENCE" PUSH BUTTONS, THE "POWER" LED SHOULD REMAIN BLINKING AND THE "CRITICAL HIGH" AND/OR "HIGH FUEL" LED'S WILL BE ILLUMINATED ACCORDING TO THE PANEL'S CURRENT OPERATION MODE (SEE CHART BELOW)

OPERATION MODE	"CRITICAL HIGH" LED	"HIGH FUEL" LED
1	OFF	ON
2	ON	OFF
3	ON	ON

- PRESS THE "SILENCE" PUSH BUTTON TO TOGGLE THROUGH THE OPERATION MODES
- WHEN THE "CRITICAL HIGH" AND "HIGH FUEL" LED STATUSES MATCH THE DESIRED OPERATION MODE, PRESS THE "TEST" PUSH BUTTON TO SAVE THE OPERATION MODE AND EXIT PROGRAMMING MODE

PROGRAM THE LOW FUEL LEVEL ALARM SETPOINT UTILIZING THE ANALOG SENDER INPUT (FOR MODEL# FFAFP4G ONLY):
- VERIFY THE ALARM PANEL IS PROGRAMMED FOR OPERATION MODE 1 (SEE INSTRUCTIONS ABOVE FOR PROGRAMMING THE PANEL'S OPERATION MODE)
- VERIFY THE CIRCUIT BOARD DIP SWITCH (SW1) IS SET TO "GAUGE"
- TURN OFF CONTROL POWER TO THE ALARM PANEL
- HOLD DOWN THE "TEST" PUSH BUTTON WHILE TURNING CONTROL POWER ON
- ONCE THE PANEL IS POWERED UP, RELEASE THE "TEST" PUSH BUTTON
- THE CURRENT LOW FUEL LEVEL ALARM SETPOINT LED WILL BE ILLUMINATED ON THE BAR LED FUEL LEVEL GAUGE
- PRESS THE "SILENCE" PUSH BUTTON TO TOGGLE THROUGH THE FUEL GAUGE LED'S, WHICH INDICATE THE AVAILABLE LOW FUEL LEVEL ALARM SETPOINTS (AVAILABLE LOW FUEL LEVEL ALARM SETPOINTS ARE 10%, 20%, 30%, 40%, 50%, OR 60%)
- WHEN THE ILLUMINATED FUEL GAUGE LED MATCHES THE DESIRED LOW FUEL LEVEL ALARM SETPOINT, PRESS THE "TEST" PUSH BUTTON TO SAVE THE LOW FUEL LEVEL ALARM SETPOINT AND EXIT PROGRAMMING MODE

OPERATION:

MODEL# FFAFP4G (FLOATS OR GAUGE CONTROL):
"FLOATS" CONTROL (SWITCH "SW1" IN "FLOATS" POSITION):
- ALL FUEL LEVEL SWITCH INPUTS ARE ACTIVE (OVER FILL, TANK FULL, LOW LEVEL, & BASIN LEAK)
- THE ANALOG SENDER INPUT AND BAR LED FUEL LEVEL GAUGE ARE INACTIVE
- RELAY OUTPUTS ACTIVATE BASED ON ACTIVATION OF THE CORRESPONDING FUEL LEVEL SWITCH INPUTS

"GAUGE" CONTROL (SWITCH "SW1" IN "GAUGE" POSITION):
- "OVER FILL" AND "BASIN LEAK" FUEL LEVEL SWITCH INPUTS REMAIN ACTIVE
- "TANK FULL" AND "LOW LEVEL" FUEL LEVEL SWITCH INPUTS ARE INACTIVE
- THE ANALOG SENDER INPUT AND BAR LED FUEL LEVEL GAUGE ARE ACTIVE
- "HIGH FUEL" LED AND "FULL" RELAY OUTPUT ACTIVATE AT 80% FUEL LEVEL (CONTROLLED BY ANALOG SENDER INPUT)
- "CRITICAL HIGH" LED AND "OVER FILL" RELAY OUTPUT ACTIVATE AT 90% FUEL LEVEL (CONTROLLED BY ANALOG SENDER INPUT)
- "CRITICAL HIGH" ALARM REACTIVATES AT 100% FUEL LEVEL IF THE ALARM WAS SILENCED AT 90% FUEL LEVEL
- "LOW FUEL" LED AND "LOW LEVEL" RELAY OUTPUT ACTIVATE AT THE PROGRAMMED LOW FUEL LEVEL ALARM SETPOINT (10%–60%) (SEE INSTRUCTIONS ABOVE FOR PROGRAMMING THE LOW FUEL LEVEL ALARM SETPOINT)
- "FUEL IN BASIN" LED AND "FUEL LEAK" RELAY OUTPUT ACTIVATE WHEN THE BASIN LEAK SWITCH CLOSES
- DURING NORMAL OPERATION, IF THE "POWER" LED IS BLINKING AND ALL OF THE BAR LED'S ON THE FUEL GAUGE ARE ARE ILLUMINATED, THEN THE ANALOG FUEL SENDER INPUT IS SHORTED
- DURING NORMAL OPERATION, IF THE "POWER" LED IS BLINKING AND ALL OF THE BAR LED'S ON THE FUEL GAUGE ARE ARE OFF, THEN THE ANALOG FUEL SENDER INPUT IS OPEN

MODEL# AFP4 (FLOATS CONTROL ONLY):
"FLOATS" CONTROL (SWITCH "SW1" IN "FLOATS" POSITION):
- ALL FUEL LEVEL SWITCH INPUTS ARE ACTIVE (OVER FILL, TANK FULL, LOW LEVEL, & BASIN LEAK)
- THE ANALOG SENDER INPUT AND BAR LED FUEL LEVEL GAUGE ARE INACTIVE
- RELAY OUTPUTS ACTIVATE BASED ON ACTIVATION OF THE CORRESPONDING FUEL LEVEL SWITCH INPUTS

MODEL# AFP2 (FLOATS CONTROL ONLY):
"FLOATS" CONTROL (SWITCH "SW1" IN "FLOATS" POSITION):
- "OVER FILL" AND "TANK FULL" FUEL LEVEL SWITCH INPUTS ARE ACTIVE
- "LOW LEVEL" AND "BASIN LEAK" FUEL LEVEL SWITCH INPUTS AND RELAY OUTPUTS ARE INACTIVE
- THE ANALOG SENDER INPUT AND BAR LED FUEL LEVEL GAUGE ARE INACTIVE
- "OVER FILL" AND "FULL" RELAY OUTPUTS ACTIVATE BASED ON ACTIVATION OF THE CORRESPONDING FUEL LEVEL SWITCH INPUTS

TEST PUSH BUTTON:
- MOMENTARILY PRESS THE "TEST" PUSH BUTTON TO ILLUMINATE ALL OF THE ALARM LED'S AND SOUND THE ALARM HORN

SILENCE PUSH BUTTON:
- WHEN AN ALARM ACTIVATES, THE ALARM HORN WILL SOUND UNTIL IT IS ACKNOWLEDGED. (EVEN IF THE ALARM CLEARS)
- TO ACKNOWLEDGE THE ALARM, PRESS THE "SILENCE" PUSH BUTTON, WHICH WILL SILENCE THE ALARM HORN

THIS AUTOCAD DRAWING IS THE PROPERTY OF GLOBAL POWER COMPONENTS AND MAY NOT BE USED IN ANY WAY DETRIMENTAL TO THE INTERESTS OF G.P.C. ANY MANUAL CHANGES WILL VOID THIS DRAWING. SPECIFICATIONS MAY CHANGE WITHOUT NOTICE. WIRING

REVISIONS				REVISIONS			
REV	DATE:	CHANGE MADE	BY	REV	DATE:	CHANGE MADE	BY

AFP4 FUEL ALARM PANEL

CUSTOMER/ID: X
JOB REF: X
DRAWING REF: X
DWG #: MODEL AFP4
DATE: 5/7/14
DRAWN BY: CDP

GLOBAL POWER COMPONENTS

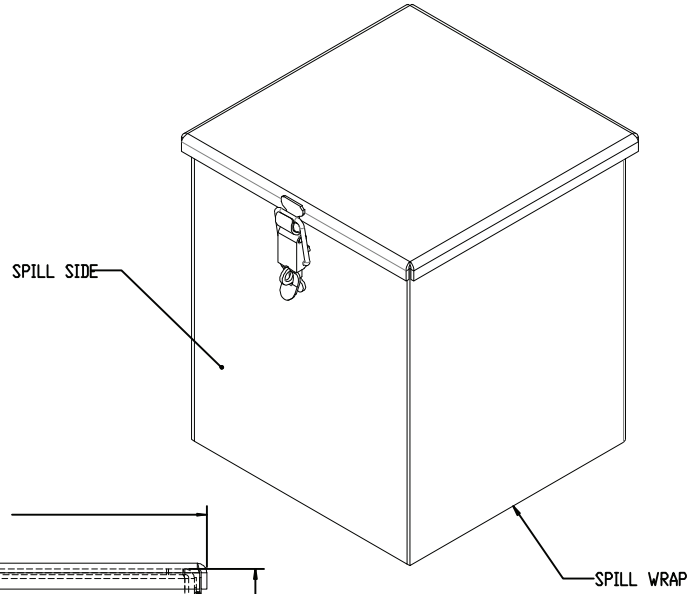

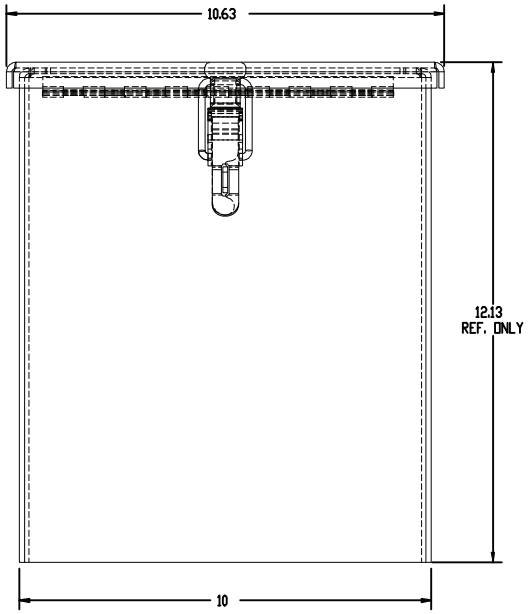

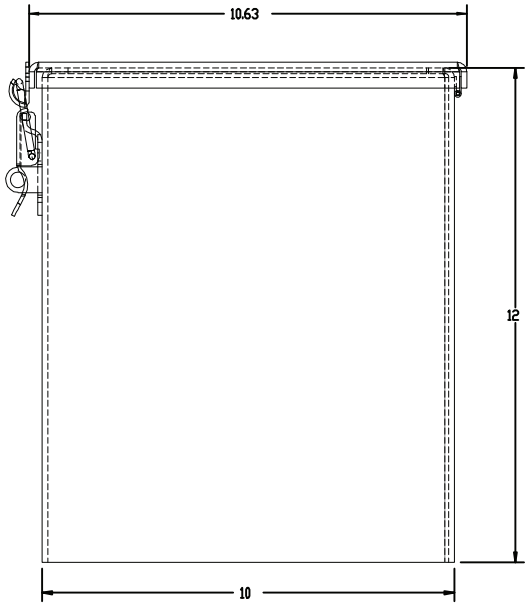

GLOBAL POWER COMPONENTS
6602 W. GREENFIELD AVE
MILWAUKEE, WI 53214
PH (414)475-3000 FAX (414) 475-3441
www.globalpowercomponents.com

Underwriters Laboratories® Listed
File No.MH18481

CUSTOMER I/D: X
JOB REF: X
DRAWING REF: X

UNLESS OTHERWISE SPECIFIED DIMENSIONS ARE IN INCHES
THE TOLERANCES ARE:

ONE PLACE	.X	± .1
TWO PLACE	.XX	± .06
ANGLE		± 2°
HOLE DIA.		± .005

THIRD ANGLE PROJECTION

DO NOT SCALE DRAWING

DRAWN BY	DATE
DV	06/28/10

MATERIAL: 10GA. STEEL

FINISH: SEE NOTE

DESCRIPTION: STANDARD 5GAL SPILL CONTAINMENT BOX

SIZE: B | DWG. NO. | REV.

SCALE: 1:4

THE INFORMATION CONTAINED IN THIS DRAWING IS THE SOLE PROPERTY OF GLOBAL POWER COMPONENTS. ANY REPRODUCTION IN PART OR WHOLE WITHOUT THE WRITTEN PERMISSION OF GLOBAL POWER COMPONENTS IS PROHIBITED.

SHEET 1 OF 2

THE INFORMATION CONTAINED IN THE DRAWING IS THE SOLE PROPERTY OF GLOBAL POWER COMPONENTS. ANY REPRODUCTION IN PART OR WHOLE WITHOUT THE WRITTEN PERMISSION OF BONN METAL FABRICATING IS PROHIBITED.

REVISIONS			
REV.	DESCRIPTION	DATE	APROVED
A	RELEASED	XX-XX-XX	XXX/XX/XXXX

ISO VIEW

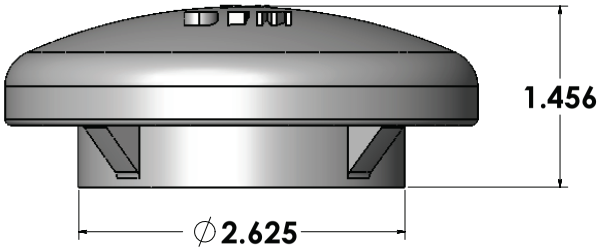

2" STANDARD VENT CAP
PART# 3152

UNLESS OTHERWISE SPECIFIED DIMENSIONS ARE IN INCHES TOLERANCES ARE:
CHIP & ACE .X ± .1
DECIMALS .XX ± .03
THREE PLACE .XXX ± .010
ANGLE ± 1°
HOLE DIA. ± .003

THIRD ANGLE PROJECTION

DO NOT SCALE DRAWING

CAD GENERATED DRAWING. DO NOT MANUALLY UPDATE

	APPROVALS	DATE
DRAWN	KJS	1-10-06
CHECKED	KJS	1-10-06
APPROVED		

MATERIAL: SEE NOTE
FINISH: SEE NOTE

GLOBAL POWER COMPONENTS
5420 W. GREENFIELD AVE
MILWAUKEE, WI 53214
PH (414) 475-5000 FAX (414) 475-5441

DESCRIPTION: CUSTOMER DIE #XXXX CUSTOMER REV: A

SIZE: D | DWG. NO.: 3152 | REV: A

SCALE: 1:1 | SHEET 1 OF 1

PART #: 3166

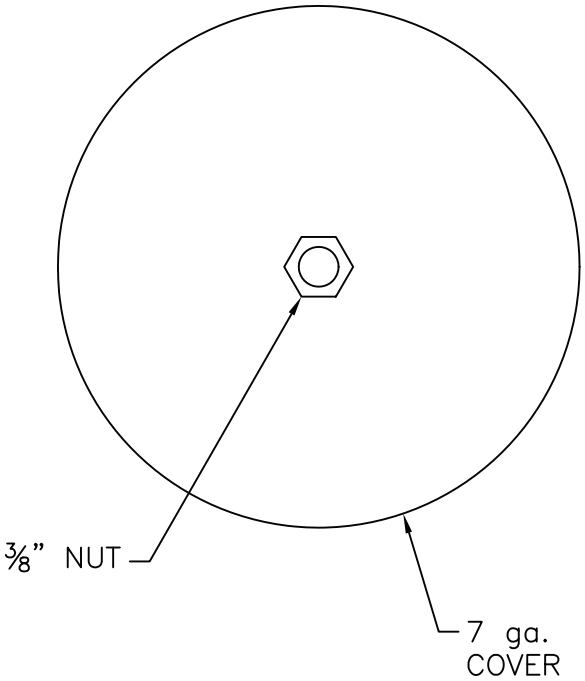

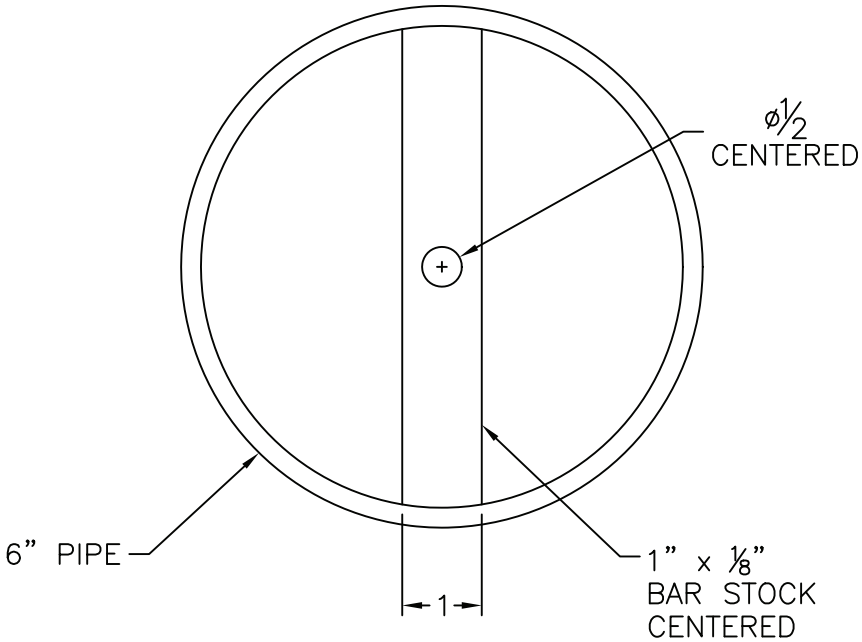

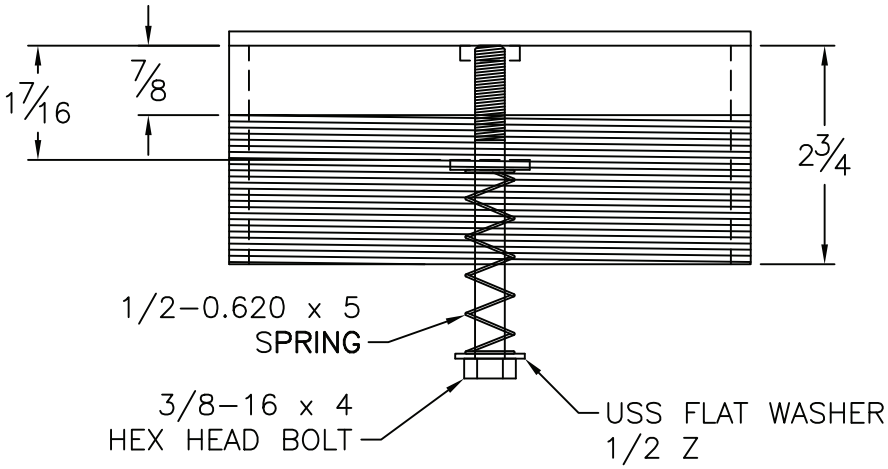

THIS AUTOCAD DRAWING IS THE PROPERTY OF GLOBAL POWER COMPONENTS AND MAY NOT BE USED IN ANY WAY DETRIMENTAL TO THE INTERESTS OF GPC. ANY MANUAL CHANGES WILL VOID THIS DRAWING. SPECIFICATIONS MAY CHANGE WITHOUT NOTICE. 1–5

REVISIONS				REVISIONS				REVISIONS			
REV	DATE:	CHANGE MADE	BY	REV	DATE:	CHANGE MADE	BY	REV	DATE:	CHANGE MADE	BY
								CUSTOMER/ID:	X		
								JOB REF:	X		

GLOBAL POWER COMPONENTS

DRAWING REF: X | DATE: 2–27–03
DWG #: E-VENTS | DRAWN BY: JLZ

172R–101101	REV.: 10

REV.	DESCRIPTION	DATE	BY

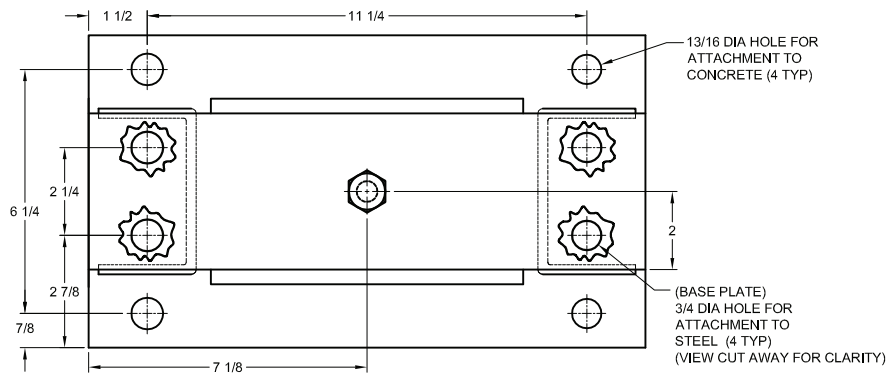

MODEL M2SS-1E SEISMICALLY RESTRAINED VIBRATION ISOLATOR FOR 1" DEFLECTION

SEISMIC MOUNT SIZE	RATED LOAD (LBS)	RATED DEFLECTION (IN)	SPRING RATE (LBS/IN)	COLOR CODE
M2SS-1E-1650N	1650	1.07	1538	RED/DK. BLUE
M2SS-1E-2000	2000	1.00	2000	TAN
M2SS-1E-3400N	3400	1.10	3100	PINK/DK. BLUE
M2SS-1E-4000	4000	1.11	3600	WHITE
M2SS-1E-5150N	5150	1.11	4626	WHITE/DK. PURPLE
M2SS-1E-5980N	5980	1.11	5364	WHITE/DK. GREEN
M2SS-1E-6500N	6500	1.04	6250	WHITE/GRAY

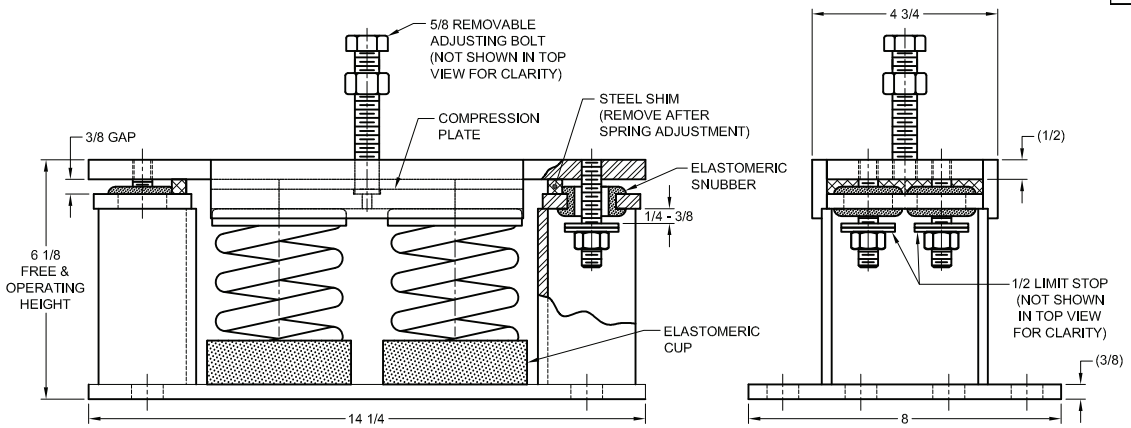

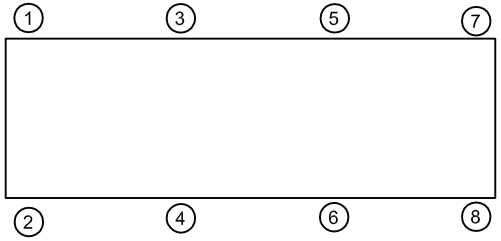

ISOLATOR SELECTIONS	
LOC 1:	LOC 2:
LOC 3:	LOC 4:
LOC 5:	LOC 6:
LOC 7:	LOC 8:
CUSTOMER EQP'T. TAG:	

NOTE: MATERIAL SHOWN IS FOR (1) SET.

NOTES:
1. ALL DIMENSIONS ARE IN INCHES, INTERPRET PER ANSI Y14.
2. STANDARD FINISH: HOUSING - POWDER COAT (COLOR:BLACK), SPRING - POWDER COAT (COLOR: SEE TABLE), HARDWARE ZINC-ELECTROPLATE.
3. EQUIPMENT MUST BE BOLTED OR WELDED TO THE TOP PLATE TO MEET ALLOWABLE SEISMIC RATINGS.
4. ISOLATOR BASE PLATE MUST BE ANCHORED TO CONCRETE WITH (4) 3/4 DIA ANCHORS.
5. ALL SPRINGS ARE DESIGNED FOR 50% OVERLOAD CAPACITY.
6. REFER TO SHEET 2 OF 2 FOR INSTALLATION INSTRUCTIONS.
7. RATED DEFLECTIONS ARE WITHIN 25% OF NOMINAL. HIGHER DEFLECTIONS ARE ALLOWED IF THEY MEET SPECIFICATIONS.

OTHER MATERIALS, COMPOUNDS, OR FINISHES WITH EQUAL OR SUPERIOR PROPERTIES MAY BE SUBSTITUTED AS THEY BECOME AVAILABLE.

CERTIFIED FOR:

JOB NAME: _____

CUSTOMER : _____

CUSTOMER P.O.: _____

SALES ORDER: _____

MODEL M2SS-1E 1650-6500 LBS. VIBRATION ISOLATOR WITH INTEGRAL SEISMIC RESTRAINT AND EXTERNAL ADJUSTMENT FOR 1 INCH DEFLECTION

THE VMC GROUP
The Power of Together
Bloomingdale, NJ 07403
Houston, TX 77041

SCALE : NONE

SHEET: 1 OF 2

Member VISCMA

DRAWING NO.:

REVISION

PROPRIETARY: EXCEPT AS OTHERWISE AGREED IN WRITING, THE INFORMATION AND DESIGN DISCLOSED HEREIN ARE THE PROPERTY OF THE VMC GROUP AND MUST NOT BE COPIED OR DISTRIBUTED OUTSIDE THE VMC GROUP EXCEPT TO AUTHORIZED PERSONS WITH A GENUINE NEED TO KNOW WHO BY THE USE HEREOF ACKNOWLEDGE THE VMC GROUP'S OWNERSHIP AND AGREE TO MAINTAIN THIS INFORMATION AND DESIGN IN STRICT CONFIDENCE.

172R–101101 | REV.: 10

REV.	DESCRIPTION	DATE	BY

1. **READ INSTRUCTIONS IN THEIR ENTIRETY BEFORE BEGINNING INSTALLATION.**

2. ISOLATORS ARE SHIPPED FULLY ASSEMBLED AND ARE TO BE POSITIONED IN ACCORDANCE WITH THE SUBMITTAL DRAWINGS OR AS OTHERWISE RECOMMENDED.

3. SET ISOLATORS ON FLOOR, HOUSEKEEPING PAD, OR SUB-BASE, ENSURING THAT ALL ISOLATOR CENTERLINES MATCH THE EQUIPMENT MOUNTING HOLES. THE VMC GROUP RECOMMENDS THAT THE ISOLATOR BASE PLATES ("B") BE INSTALLED ON A LEVEL SURFACE. SHIM OR GROUT AS REQUIRED, LEVELING ALL ISOLATOR BASE PLATES AT THE SAME ELEVATION (1/4-INCH MAXIMUM DIFFERENCE CAN BE TOLERATED).

4. ANCHOR ALL ISOLATORS TO THE FLOOR, HOUSEKEEPING PAD, OR SUB-BASE USING THRU HOLES ("C") FOR CONCRETE OR ("D") FOR STEEL AS REQUIRED. USE ANCHORS MEETING THE DESIGN REQUIREMENTS SPECIFIED ON SHEET 1 OF 2. WELDING TO STEEL IS PERMITTED PROVIDING THE WELD ACHIEVES THE REQUIRED STRENGTH.

5. ISOLATORS ARE SHIPPED TO THE JOBSITE WITH (2) REMOVABLE SPACER SHIMS ("E") BETWEEN THE TOP PLATE AND THE HOUSING. THESE SHIMS **MUST** BE IN PLACE WHEN THE EQUIPMENT IS POSITIONED OVER THE ISOLATORS.

6. WITH ALL SHIMS ("E") IN PLACE, REMOVE ADJUSTING BOLT "G", AND SET ASIDE. KEEP THE NUT "H" SCREWED ONTO THE ADJUSTING BOLT. PLACE THE MACHINE OR EQUIPMENT ONTO TOP PLATE "A", ALIGNING THE EQUIPMENT MOUNTING HOLE WITH THE TAPPED HOLE IN THE TOP PLATE. REATTACH THE ADJUSTING BOLT BY BOLTING THROUGH THE EQUIPMENT MOUNTING HOLE INTO THE TAPPED HOLE OF THE (**Cont.**)

6. (Cont.)
ISOLATOR. TURN THE ADJUSTING BOLT UNTIL IT STARTS TO COMPRESS THE SPRING. LEAVE NUT "H" AT THE TOP OF THE ADJUSTING BOLT, LEAVING ROOM FOR ADJUSTING THE ISOLATOR PER STEP 9.

7. **THE ADJUSTMENT PROCESS CAN ONLY BEGIN AFTER THE EQUIPMENT OR MACHINE IS AT ITS FULL OPERATING WEIGHT.**

8. BACK OFF EACH OF THE (2) OR (4) LIMIT STOP LOCKNUTS ("F") PER ISOLATOR 1/4- TO 3/8-INCH.

9. ADJUST EACH ISOLATOR IN SEQUENCE BY TURNING ADJUSTING BOLT(S) "G" ONE FULL CLOCKWISE TURN AT A TIME. REPEAT THIS PROCEDURE ON ALL ISOLATORS, ONE AT A TIME. CHECK THE LIMIT STOP LOCKNUTS ("F") PERIODICALLY TO ENSURE THAT CLEARANCE BETWEEN THE WASHER AND RUBBER GROMMET IS MAINTAINED. STOP ADJUSTMENT OF AN ISOLATOR ONLY WHEN THE TOP PLATE ("A") HAS RISEN JUST ABOVE THE SHIM ("E").

10. REMOVE ALL SPACER SHIMS ("E").

11. FINE ADJUST ISOLATORS TO LEVEL EQUIPMENT.

12. ADJUST ALL LIMIT STOP LOCKNUTS ("F") PER ISOLATOR TO OBTAIN 3/8-INCH GAP. THE LIMIT STOP NUTS MUST BE KEPT AT THIS 3/8-INCH GAP TO ENSURE UNIFORM BOLT LOADING DURING UPLIFT (AS IN THE CASE WHEN A COOLING TOWER IS DRAINED).

13. INSTALLATION IS COMPLETE.

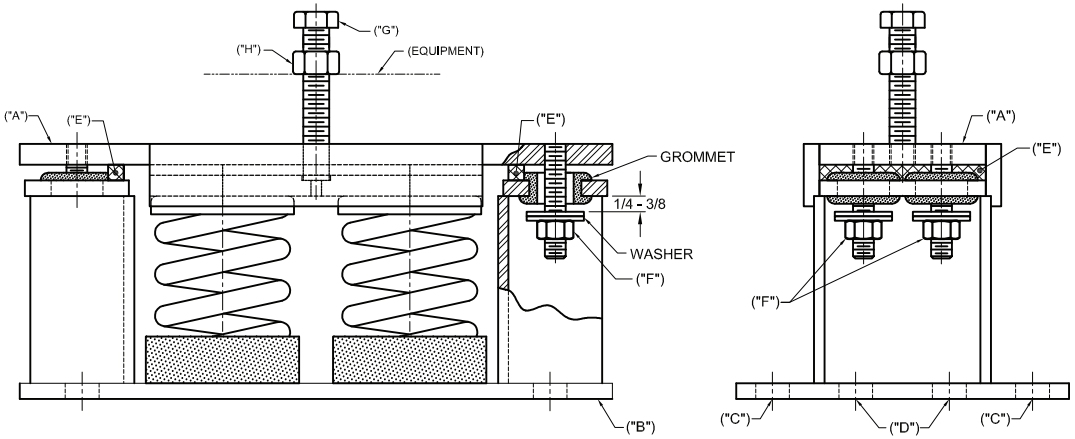

OTHER MATERIALS, COMPOUNDS, OR FINISHES WITH EQUAL OR SUPERIOR PROPERTIES MAY BE SUBSTITUTED AS THEY BECOME AVAILABLE.

CERTIFIED FOR:

JOB NAME: _____

CUSTOMER : _____

CUSTOMER P.O.: _____

SALES ORDER: _____

MODEL M2SS-1E 1650-6500 LBS.
VIBRATION ISOLATOR
WITH INTEGRAL SEISMIC RESTRAINT
AND EXTERNAL ADJUSTMENT
FOR 1 INCH DEFLECTION

THE VMC GROUP
The Power of Together
Bloomingdale, NJ 07403
Houston, TX 77041

SCALE : NONE

SHEET: 2 OF 2

DRAWING NO.:

REVISION

Member VISCMA

PROPRIETARY: EXCEPT AS OTHERWISE AGREED IN WRITING, THE INFORMATION AND DESIGN DISCLOSED HEREIN ARE THE PROPERTY OF THE VMC GROUP AND MUST NOT BE COPIED OR DISTRIBUTED OUTSIDE THE VMC GROUP EXCEPT TO AUTHORIZED PERSONS WITH A GENUINE NEED TO KNOW WHO BY THE USE HEREOF ACKNOWLEDGE THE VMC GROUP'S OWNERSHIP AND AGREE TO MAINTAIN THIS INFORMATION AND DESIGN IN STRICT CONFIDENCE.

Mechanical Drawings

Section 4

Johnny Dababneh
10/30/23: Approved for submittal.
Hold for customer approval.

JOB #	TANK GAL	USEABLE GAL	GENSET MODEL	GENSET FOOTPRINT	ENCL. WEIGHT
39664	3950 GAL	3750 GAL	2500DQKAN	277.7" X 106.8"	16,350 LBS

APPROVED BY: _____ DATE: _____

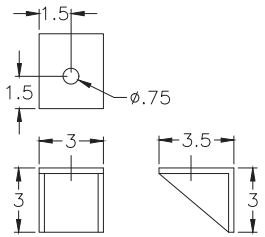

ENCLOSURE MOUNTING BRACKET
QTY: 12

GALVANNEALED CONSTRUCTION

BILL OF MATERIAL

PART #	DESCRIPTION	QTY
GWE-G2	GALVANNEAL CONSTRUCTION (14GA)	
6505	ACCESS DOOR	7
6501	STAINLESS STEEL DOOR HARDWARE	7
6507	DOOR RESTRAINT	7
6508	PANIC HARDWARE	7
6610	EXTERNAL VERTICAL INTAKE HOOD	1
6615	INTERNAL VERTICAL DISCHARGE PLENUM	1
6520	PERFORATED INTERIOR LINING	1
6522	3" INSULATION BOARD	1
6805	RAIN COLLAR	1
6843	GPC SUPPLIED EXHAUST SYSTEM	1
6855	INTERNALLY MOUNTED SILENCER	1
	SIL: E-C-12-18-1460	1
	FLEX: BLWA-10-1437-1461	2
6970	VERTICAL SILENCER DISCHARGE	1
	ELBOW: EL-18F-C3600	1
	RAIN CAP: PF-55-03-18	1
6904	MOUNT & WIRE BATTERY CHARGER	1
6902	WIRE BLOCK HEATER	1
6518E	EXTEND FUMES/DRAINS IF VALVE PRESENT	1
6982	LED COMPACT FIXTURE (4' VAPOR TIGHT)	4
6905	3-WAY LIGHT SWITCH	2
6916	GFCI OUTLET (20 AMP)	1
6918	GFCI PROTECTED OUTLET (20 AMP)	1
6914	100A DIST PANEL (1ϕ, 120/240V)	1
SPECIAL	INSTALL CUSTOMER SUPPLIED FLEET GUARD	1
41515	PANT COLOR ONAN GREEN (GLOSS)	

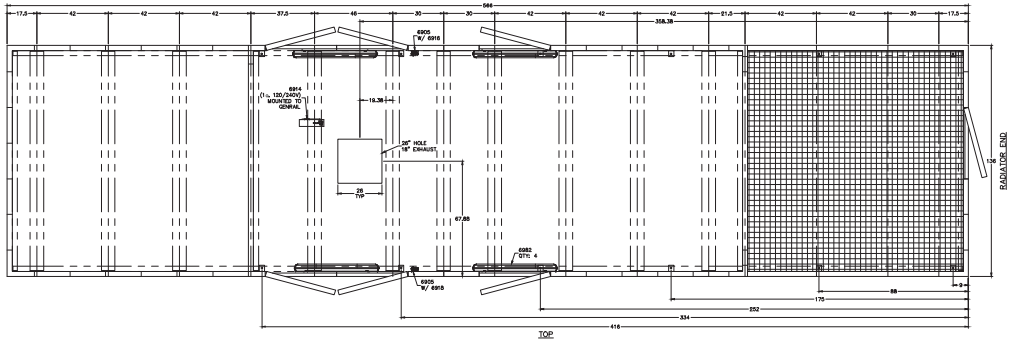

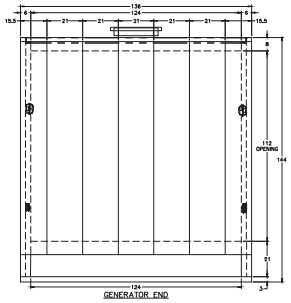

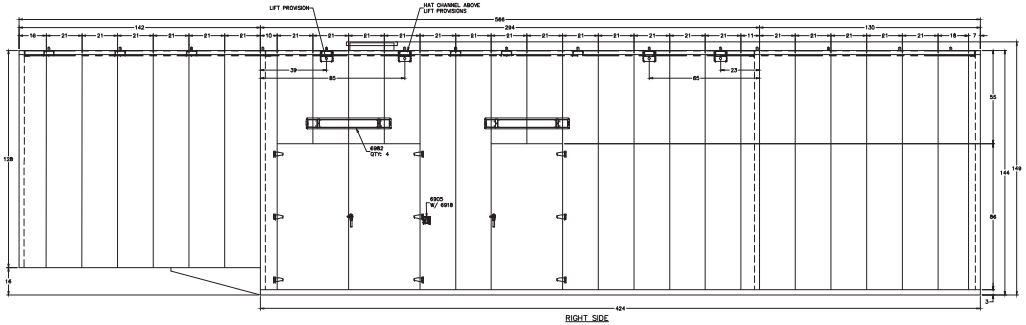

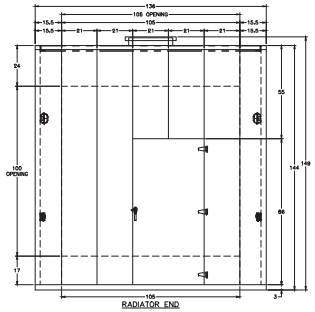

THIS AUTOCAD DRAWING IS THE PROPERTY OF GLOBAL POWER COMPONENTS AND MAY NOT BE USED IN ANY WAY DETRIMENTAL TO THE INTERESTS OF G.P.C. ANY MANUAL CHANGES WILL VOID THIS DRAWING. SPECIFICATIONS MAY CHANGE WITHOUT NOTICE. ENCL

REVISIONS				REVISIONS			
REV	DATE:	CHANGE MADE	BY	REV	DATE:	CHANGE MADE	BY

GWE-G2-2500-LIFT-3750 ENCLOSURE

CUSTOMER/ID: CUMMINS NORTH
JOB REF: BUDGET
DRAWING REF: 857899-02
DWG #: 45-39664
DATE: 10/20/23
DRAWN BY: DJM

GLOBAL POWER COMPONENTS™
2300 S. 51st ST
MILWAUKEE, W 53219
PH 414.475.3000 FAX 414.475.3441
www.globalpowercomponents.com

Johnny Dababneh
10/30/23: Approved for submittal.
Hold for customer approval.

JOB #	TANK CAPACITY	USABLE CAPACITY	GENSET MODEL	GENSET FOOTPRINT	FRAME WEIGHT
39664–3	3950 GAL	3750 GAL	2500DQKAN	277.7" X 106.8"	7025 LBS

APPROVED BY: _____ DATE: _____

RECESSED TOP COVER NOT INTENDED FOR CONTAINMENT – STITCH WELD ONLY

BILL OF MATERIAL

PART #	DESCRIPTION	QTY
6515	ENCLOSURE/GENSET MOUNTING FRAME (W12X26)	1
8304	W8X18 I–BEAM GENSET/COVER SUPPORT	10
8430	SEISMIC ISOLATOR SUPPORT CHANNEL (C6X8.2)	18
8426	GPC SUPPLIED ISOLATORS (M2SS–1E–4000)	18
8320	DIAMOND PLATE TOP COVER	1
8416	3/4" GUSSET LIFT PROVISION	12
3193	F. CPLG, 1", FITTING W/PLUG	2
9638	PAINT COLOR GLOSS BLACK	

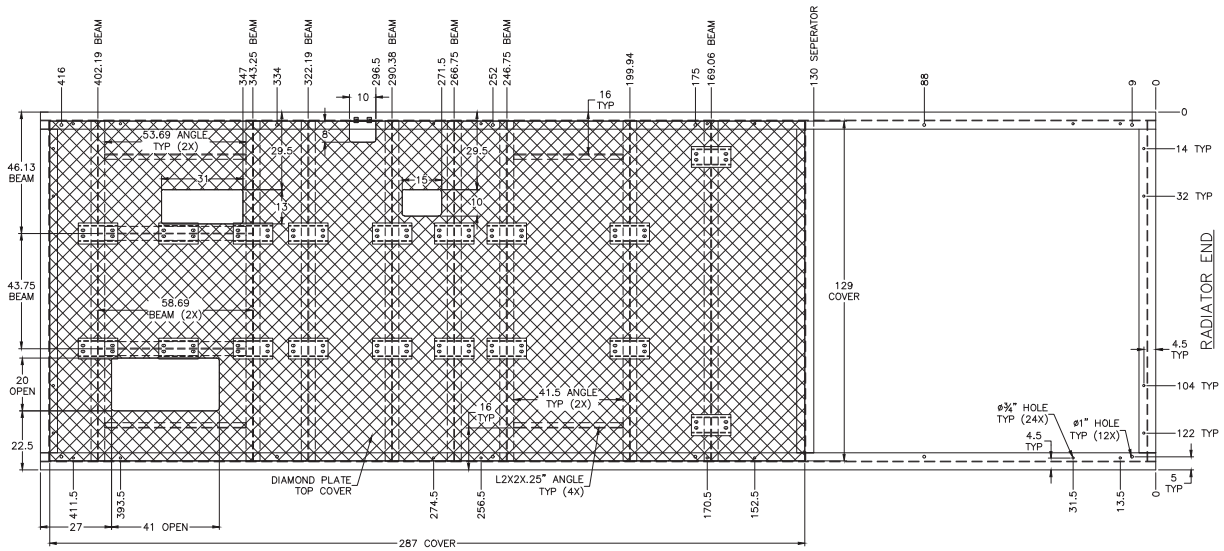

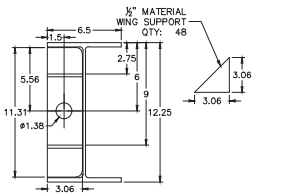

LIFT BASE LIFT PLATE
(FOR W12X26 FRAME)
QTY: 12 MAT: 3/4" PLATE

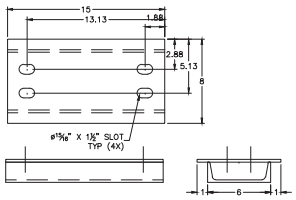

ISOLATOR SUPPORT CHANNEL
(M2SS–1E–4000) QTY: 18
MAT: C6x8.2 W/ .25" PLATE

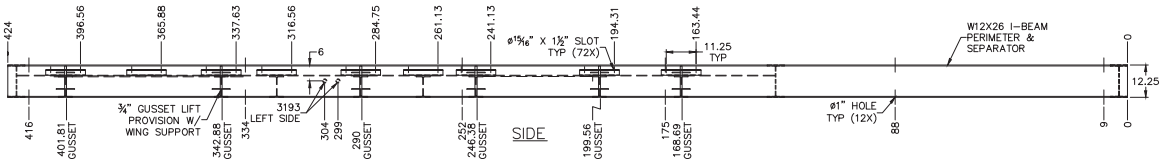

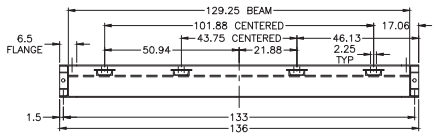

THIS AUTOCAD DRAWING IS THE PROPERTY OF GLOBAL POWER COMPONENTS AND MAY NOT BE USED IN ANY WAY DETRIMENTAL TO THE INTERESTS OF G.P.C. ANY MANUAL CHANGES WILL VOID THIS DRAWING. SPECIFICATIONS MAY CHANGE WITHOUT NOTICE. LIFT

REVISIONS				REVISIONS			
REV	DATE:	CHANGE MADE	BY	REV	DATE:	CHANGE MADE	BY

ENCLOSURE/GENSET MOUNTING FRAME

CUSTOMER/ID:CUMMINS NORTH
JOB REF: BUDGET
DRAWING REF: 857899–02
DWG #: 45–39664–3
DATE: 10/20/23
DRAWN BY: DJM

GLOBAL POWER COMPONENTS™
2300 S. 51st ST
MILWAUKEE, WI 53219
PH 414.475.3000 FAX 414.475.3441
www.globalpowercomponents.com

Johnny Dababneh

10/30/23: Approved for submittal.
Hold for customer approval.

JOB #	TANK CAPACITY	USABLE CAPACITY	GENSET MODEL	GENSET FOOTPRINT	TANK WEIGHT
39664–4	3950 GAL	3750 GAL	2500DQKAN	277.7" X 106.8"	10,850 LBS

APPROVED BY: _____ DATE: _____

BILL OF MATERIAL			
LETTER	PART #	DESCRIPTION	QTY
S	3166	FLANGE, 6", E–VENT	4
T	3660	FLANGE, 2", RETURN, W/ 1" DIP TUBE	1
U	3660	FLANGE, 2", SUPPLY, W/ 1" DIP TUBE	1
	700–1075	1" SPRING CHECK VALVE	1
V	1000	FLANGE, 2", LOW LEVEL ALARM @ 11"	1
	1020	CRIT. HIGH LEVEL ALARM @ 1–3/4"	1
X	1003	FLANGE, 2", FUEL LEVEL GAUGE	1
Y	3152	FLANGE, 2", STANDARD VENT CAP	1
Z	3005	FLANGE, 2", LOCKING FILL PORT	1
A	4300	FLANGE, 2", FUEL IN BASIN ALARM	1
B	3502	FLANGE, 1/2", BASIN DRAIN	1
C	8410	1/2" FLUSH MOUNT LIFTING PLATE	4
D	8002	REMOVABLE ACCESS PANEL	1
E	4002	INTERNAL ELECTRICAL STUB UP AREA	1
F	3195	FLANGE, 2", FITTING W/ PLUG	4
G	3190	FLANGE, 3/8", FITTING W/ PLUG	1
H	1010	FLANGE, 2", HIGH LEVEL ALARM @ 2–3/4"	1
J	4002	INTERNAL ELECTRICAL STUB UP AREA	1
	8200	5 GALLON SPILL CONTAINMENT	1
	AFP4	FOUR ALARM PANEL W/ RELAYS	1
	AFP4I	MOUNT & WIRE PANEL BY FILL	1
	3520	RAIN RUNOFF® OPTION	1
	DW–101	SECONDARY CONTAINMENT	
9638		PAINT COLOR GLOSS BLACK	

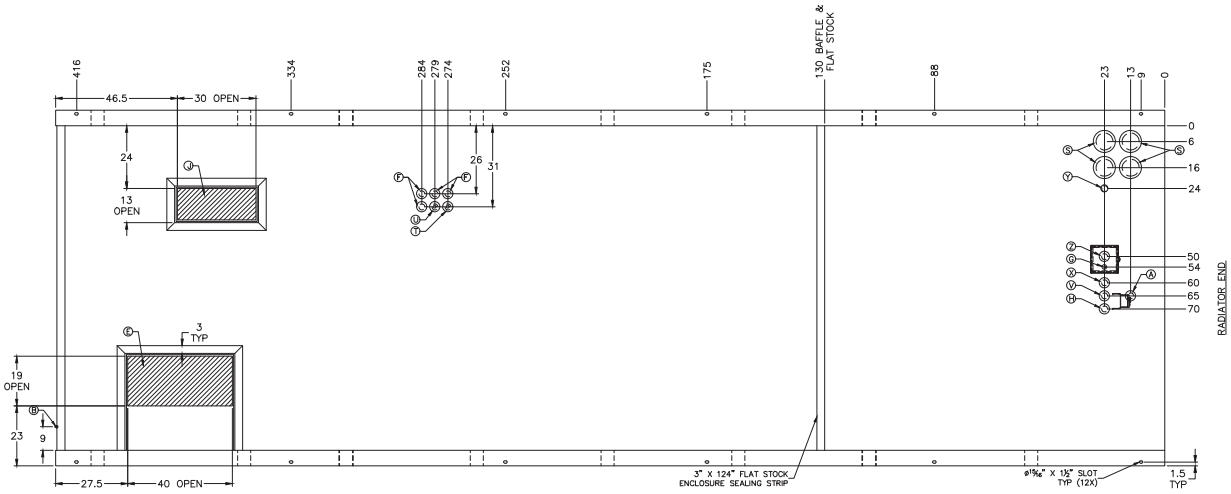

TOP

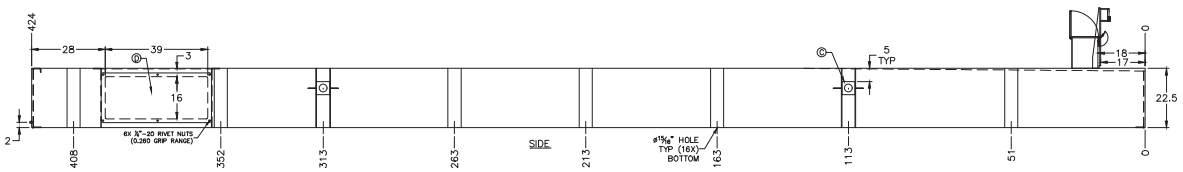

SIDE

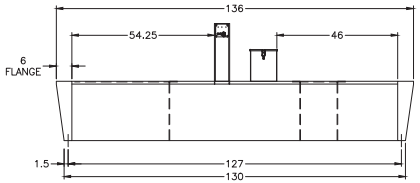

RADIATOR END

THIS AUTOCAD DRAWING IS THE PROPERTY OF GLOBAL POWER COMPONENTS AND MAY NOT BE USED IN ANY WAY DETRIMENTAL TO THE INTERESTS OF G.P.C. ANY MANUAL CHANGES WILL VOID THIS DRAWING. SPECIFICATIONS MAY CHANGE WITHOUT NOTICE.

TANK

REVISIONS				REVISIONS			
REV	DATE:	CHANGE MADE	BY	REV	DATE:	CHANGE MADE	BY

SUB BASE TANK W/ RUPTURE BASIN & STUB UP

CUSTOMER/ID: CUMMINS NORTH
JOB REF: BUDGET
DRAWING REF: 857899–02
DWG #: 45–39664–4
DATE: 10/20/23
DRAWN BY: DJM

Underwriters Laboratories, Inc. LISTED File Numbers: MH18481 MH46743 MH25279

GLOBAL POWER COMPONENTS™
2300 S. 51st ST
MILWAUKEE, WI 53219
PH 414.475.3000 FAX 414.475.3441
www.globalpowercomponents.com

Johnny Dababneh

10/30/23: Approved for submittal.
Hold for customer approval.

JOB #	TANK GAL	USEABLE GAL	GENSET MODEL	GENSET FOOTPRINT	ASSY. WEIGHT
39664	3950 GAL	3750 GAL	2500DQKAN	277.7" X 106.8"	82,975 LBS

APPROVED BY: _____ DATE: _____

GALVANNEALED CONSTRUCTION

BILL OF MATERIAL

PART #	DESCRIPTION	QTY
GWE-G2	GALVANNEAL CONSTRUCTION (14GA)	
6505	ACCESS DOOR	7
6501	STAINLESS STEEL DOOR HARDWARE	7
6507	DOOR RESTRAINT	7
6508	PANIC HARDWARE	7
6610	EXTERNAL VERTICAL INTAKE HOOD	1
6615	INTERNAL VERTICAL DISCHARGE PLENUM	1
6520	PERFORATED INTERIOR LINING	1
6522	3" INSULATION BOARD	1
6805	RAIN COLLAR	1
6843	GPC SUPPLIED EXHAUST SYSTEM	1
6855	INTERNALLY MOUNTED SILENCER	1
	SIL: E-C-12-18-1460	1
	FLEX: BLWA-10-1437-1461	2
6970	VERTICAL SILENCER DISCHARGE	1
	ELBOW: EL-18F-C3600	1
	RAIN CAP: PF-55-03-18	1
6904	MOUNT & WIRE BATTERY CHARGER	1
6902	WIRE BLOCK HEATER	1
6518E	EXTEND FUMES/DRAINS IF VALVE PRESENT	1
6982	LED COMPACT FIXTURE (4' VAPOR TIGHT)	4
6905	3-WAY LIGHT SWITCH	2
6916	GFCI OUTLET (20 AMP)	1
6918	GFCI PROTECTED OUTLET (20 AMP)	1
6914	100A DIST PANEL (1ϕ, 120/240V)	1
SPECIAL	INSTALL CUSTOMER SUPPLIED FLEET GUARD	1
41515	PANT COLOR ONAN GREEN (GLOSS)	

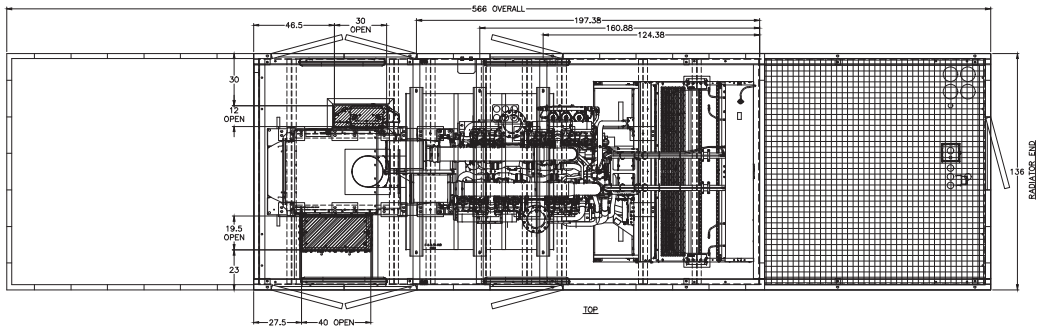

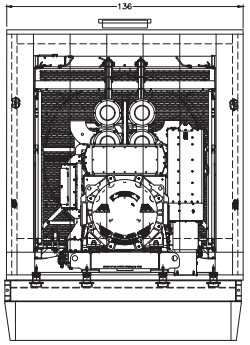

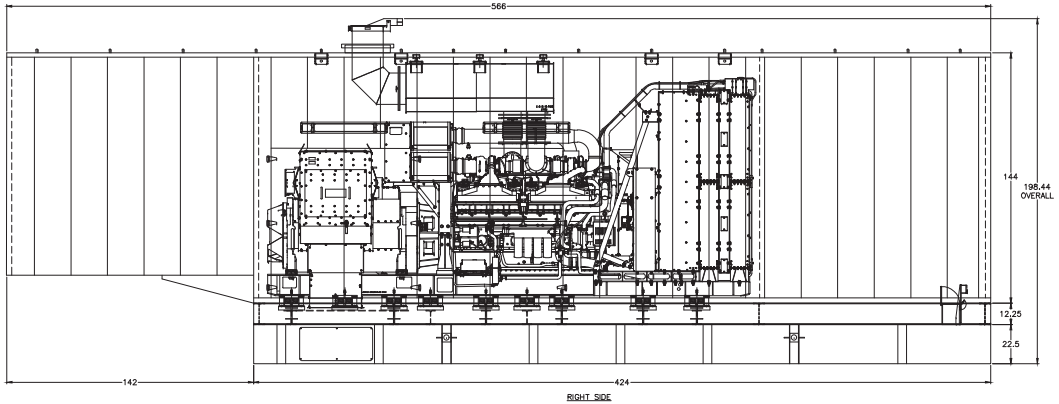

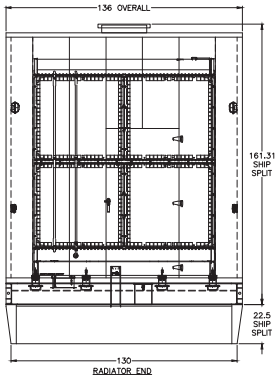

THIS AUTOCAD DRAWING IS THE PROPERTY OF GLOBAL POWER COMPONENTS AND MAY NOT BE USED IN ANY WAY DETRIMENTAL TO THE INTERESTS OF G.P.C. ANY MANUAL CHANGES WILL VOID THIS DRAWING. SPECIFICATIONS MAY CHANGE WITHOUT NOTICE. ASSY

REVISIONS				REVISIONS			
REV	DATE:	CHANGE MADE	BY	REV	DATE:	CHANGE MADE	BY

GWE-G2-2500-LIFT-3750 ASSEMBLY

CUSTOMER/ID: CUMMINS NORTH
JOB REF: BUDGET
DRAWING REF: 857899-02
DWG #: 45-39664
DATE: 10/20/23
DRAWN BY: DJM

GLOBAL POWER COMPONENTS™
2300 S. 51st ST
MILWAUKEE, W 53219
PH 414.475.3000 FAX 414.475.3441
www.globalpowercomponents.com

Electrical Schematics

Section 5

JOB #
39664

THIS AUTOCAD DRAWING IS THE PROPERTY OF GLOBAL POWER COMPONENTS AND MAY NOT BE USED IN ANY WAY DETRIMENTAL TO THE INTERESTS OF G.P.C. ANY MANUAL CHANGES WILL VOID THIS DRAWING. SPECIFICATIONS MAY CHANGE WITHOUT NOTICE.

NOTES:
- MINIMUM 12AWG THHN STRANDED WIRING TO BE USED FOR DISTRIBUTION PANEL FEEDER CIRCUITS UNLESS OTHERWISE NOTED
- ALL CIRCUITS TO BE WIRED IN EMT CONDUIT

* – PROVIDED BY OTHERS
——— GPC WIRING
– – – – – – WIRING BY OTHERS
—— · —— OPTIONAL WIRING (WIRE ONLY IF EQUIPMENT IS PROVIDED)

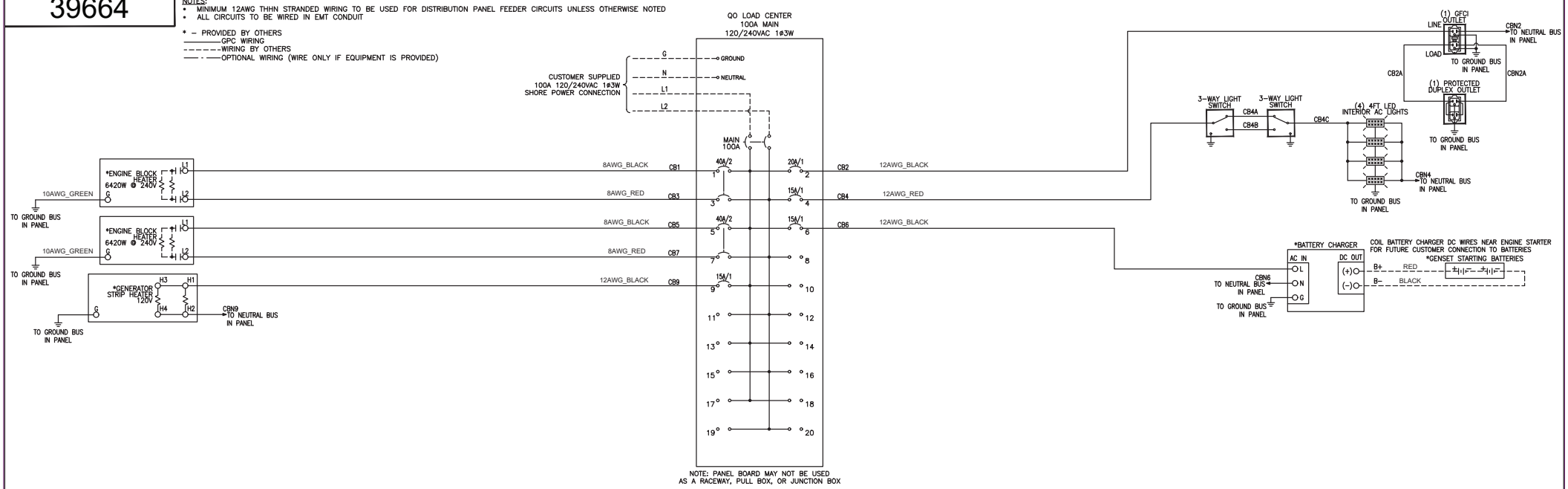

BILL OF MATERIAL

QTY	BINSTOCK	DESCRIPTION	MANUFACTURER	PART NO.
1	Y	QO LOAD CENTER, 100A, 120/240V 1Ø3W	SQUARE D	QO120M100P
1	Y	LOAD CENTER TRIM	SQUARE D	QOC20U100S
1	Y	GROUND BAR (FOR LOAD CENTER)	SQUARE D	PK9GTA
2	Y	CIRCUIT BREAKER, 30A, 2P, 10KAIC, PLUG-ON	SQUARE D	QO230
1	Y	CIRCUIT BREAKER, 20A, 1P, 10KAIC, PLUG-ON	SQUARE D	QO120
3	Y	CIRCUIT BREAKER, 15A, 1P, 10KAIC, PLUG-ON	SQUARE D	QO115
1	Y	GFCI OUTLET	HUBBELL	GFTWRST20I
1	Y	DUPLEX OUTLET	HUBBELL	BR20I
4	Y	4FT LED LIGHTS	SYLVANIA	VAPOR1B/040UNVD 840/48EC/GR
2	Y	3-WAY SWITCHES	HUBBELL	CSB320I

REV:	DATE:	DESCRIPTION	BY:
		REVISIONS	WIRING

GWE-G2-2500-LB-ELECTRICAL

CUSTOMER/ID: CUMMINS NORTH
JOB REF: BUDGET
DRAWING REF: X
DWG #: 45-39664 1-PHASE
DATE: 10/23/23
DRAWN BY: RFE

GLOBAL POWER COMPONENTS

Enclosure Color Chart

Section 6

GLOBAL POWER COMPONENTS

2300 S 51st
Milwaukee, WI 53219
(414) 475-3000

Forest Green 41529	Green 41515	Tan 21670	Cream 21695
Cashmere 20004	Almond 21669	Eggshell White 91467	Yellow 81209
Spectrum Gray 31745	ANSI Gray 30005	Flat Black 9640	Gloss Black 9638

Custom Colors Available Upon Request

Warranty Statement

Section 7

GLOBAL POWER COMPONENTS
Sub Base Tanks * Enclosures * Day Tanks * Primary Tanks
Portable Power Containers

WARRANTY

All sales by BHP Inc. d/b/a Global Power Components (GPC) are subject to the following terms and conditions.

GPC warrants that its products are sold in accordance with GPC's published specifications, and further warrants these products against defects in GPC's workmanship and materials under normal use and service, in conformance with the manufacturer's recommended installation, for a period of **twelve (12) months** from the date of sale as determined by the invoice date of the sale item.

All liability and obligations under this warranty are limited to repair or replacement, at the option of GPC, of the product, F.O.B. GPC's plant in Milwaukee, Wisconsin. All return shipping charges must be prepaid by the warranty claimant. If at the warranty claimant's request, GPC agrees to conduct any warranty service away from GPC's Milwaukee, Wisconsin plant ("field repair"), and the defect is not covered under this warranty, then all expenses relating to said field repair service call will be billed to the warranty claimant.

GPC makes no claim of merchantability other than for the specifications approved or provided in writing by GPC.

GPC shall not be liable for special, incidental, or consequential damages of any kind, including but not limited to, re-installation labor, installation charges, transportation charges, loss of use, time or revenue, or rental equipment.

GPC shall not be liable for claims arising from:

1. Failure or addition of OEM or other component parts not manufactured by GPC, (including but not limited to pumps, tires, wheels, brakes, bearings, axles, couplers, switches, motors, batteries, etc.). All such claims must be directed to the OEM manufacturer of such parts for consideration. GPC makes no warranty with regard to any such OEM or component parts manufactured by others.
2. Charges for labor and/or materials for any field repair unless expressly authorized in writing by an officer of GPC prior to the commencement of the work.
3. Negligence, normal wear, accident, misuse, abuse, improper installation, lack of maintenance or negligent maintenance, unauthorized modifications, improper storage or handling, improper or contaminated fuel, fluids or lubrication, use of parts that do not meet GPC specifications.
4. Rust, oxidation or other surface damage caused by paint or finish failure due to improper repair of surface damage incurred during use or maintenance.
5. Any damage occurring or resulting from transportation. Premature failure of any protective finishes will not be covered if due to damage occurring during transportation or installation.

GPC makes no other express warranty. Any other implied or statutory warranty is excluded or expressly limited to the duration of this warranty to the extent permitted by law. No person is authorized to make any other warranties or assume any liabilities on behalf of GPC unless made or assumed in writing by an officer of GPC.

USE OF THIS DOCUMENT

The controlled master copy of this document resides in the electronic format. All printed copies of this document are intended to be used for courtesy or training only. Verify that the version of this printed document matches the current version of the electronic master before use.

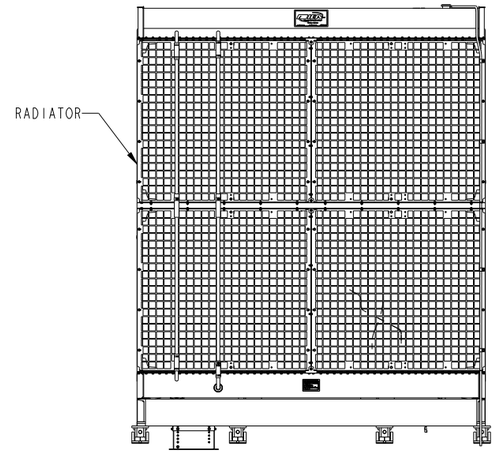

REAR

NOTES:

1. DIMENSIONS SHOWN IN [ ] ARE IN INCHES.
2. ALL DIMENSIONS ARE REFERENCE BASED ON CAD DATA.
3. PROVIDE FLEXIBLE CONDUIT TO CONTROL BOX.
4. GENSET SHIPPED FILLED WITH OIL.
5. SUPPLIED FUEL HOSE:
   - 5.1. FUEL INLET HOSE 25 [1] X 1270 [50] LONG WITH 1-11 1/2 NPT EXTERNAL FITTING.
   - 5.2. FUEL OUTLET HOSE 16 [.6] X 1270 [50] LONG WITH 3/4-14 NPT EXTERNAL FITTING.
6. COMMON REFERENCE POINT ON GENSET SKID (—►) POINTS TO ANCHORING HOLE ON SKID. (SHEET 3)
7. FOR C OF G VALUE SEE SHEET 2.

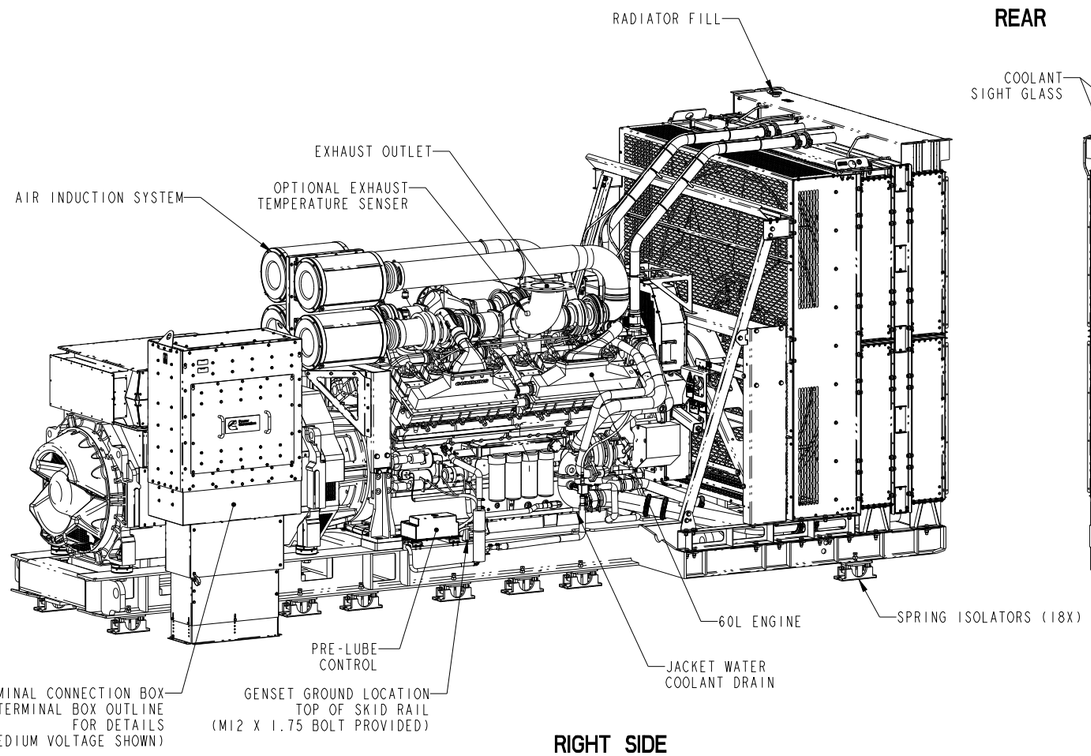

RIGHT SIDE

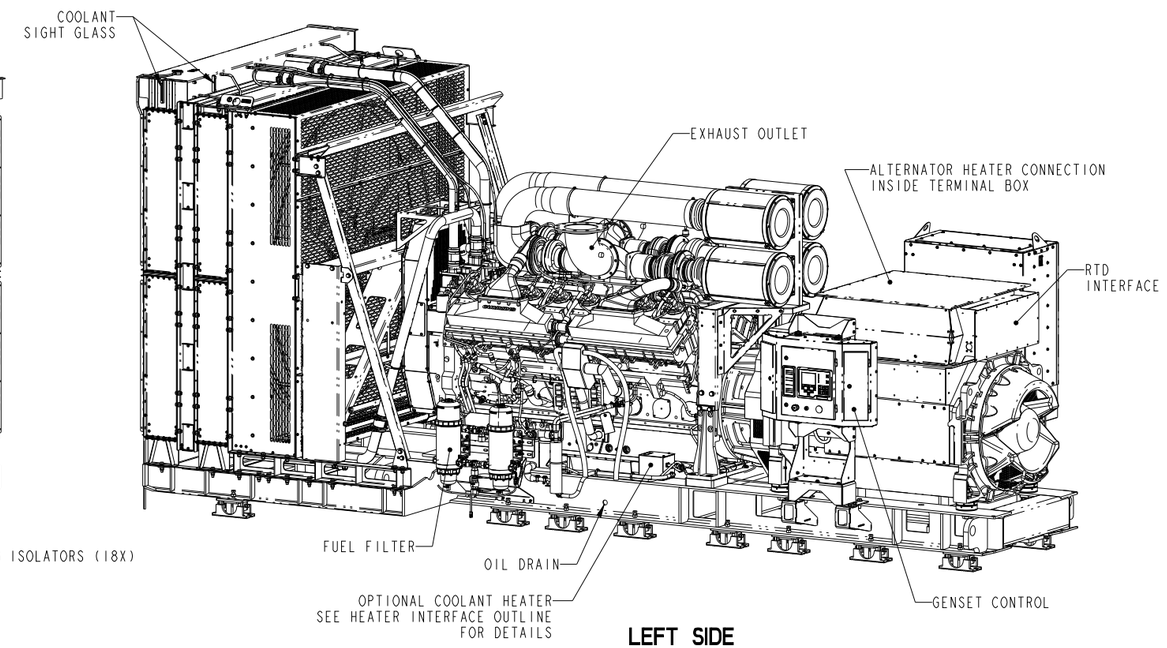

LEFT SIDE

LAST DATUM LETTER USED: .		LAST REFERENCE LETTER USED: .	
MODEL/PLATFORM: DOKAN		THIS PART IS SIMILAR TO:	
UNLESS OTHERWISE SPECIFIED THE FOLLOWING SHALL APPLY			ANG. TOL.: ± -
DIMENSIONAL TOLERANCES:	X ± -	.X ± -	.XX ± -
HOLE SIZE 0.00-4.99 TOL. +0.15/-0.08	HOLE SIZE 5.00-9.99 TOL. +0.20/-0.10	HOLE SIZE 10.00-17.49 TOL. +0.25/-0.13	HOLE SIZE 17.50-24.99 TOL. +0.30/-0.13

Cummins Inc.

DIMENSIONS ARE IN: MILLIMETERS
[ ] ARE IN: -
SIZE: D SCALE:1:20
DIMENSIONING AND TOLERANCING PER: ASME Y14.5-2009
THIRD ANGLE PROJECTION
CAD SYSTEM PTC® Creo® Parametric

Document Generated: **10APR2020 20:47 GMT**

Cummins Data Classification:
Cummins Confidential

This document (and the information shown thereon) is **Confidential and Proprietary** and shall not be disclosed to others in hard copy or electronic form, reproduced by any means, or used for any purpose without written consent of Cummins Inc.

Part Number: **A054H274** Part Revision: **C**

Part Name: **OUTLINE,GENSET**

Drawing Category: **Detail** State: **Released**

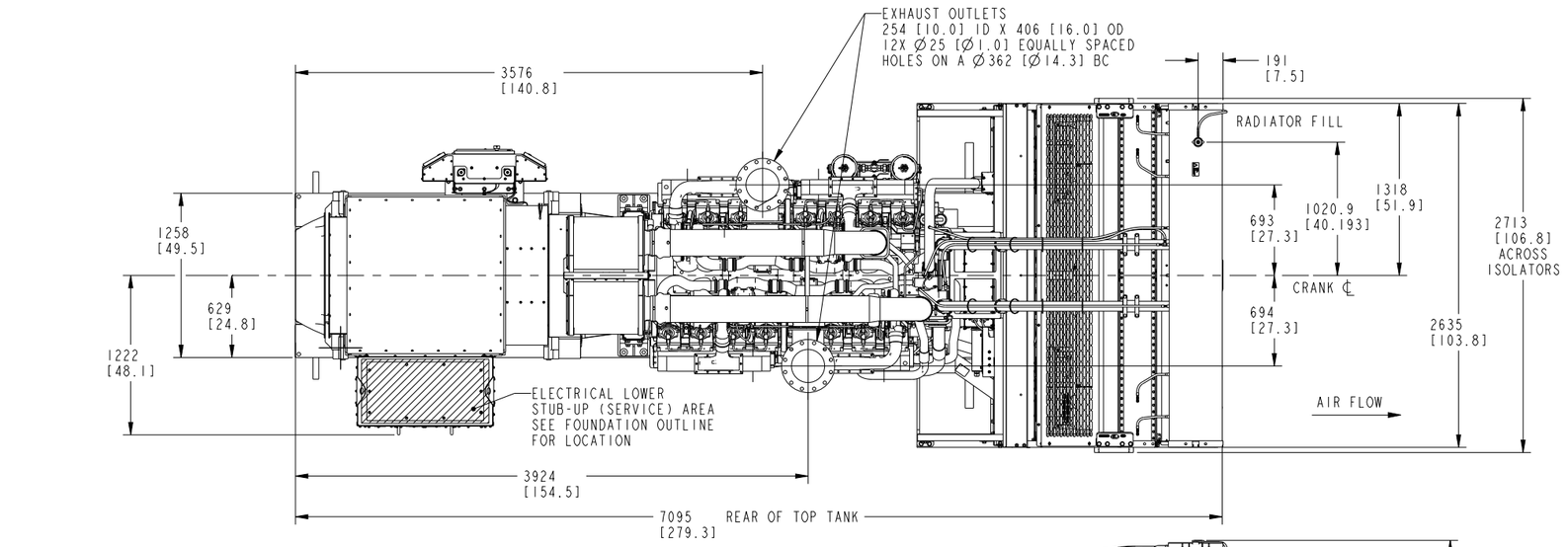

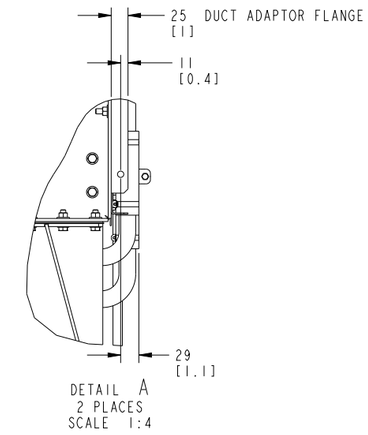

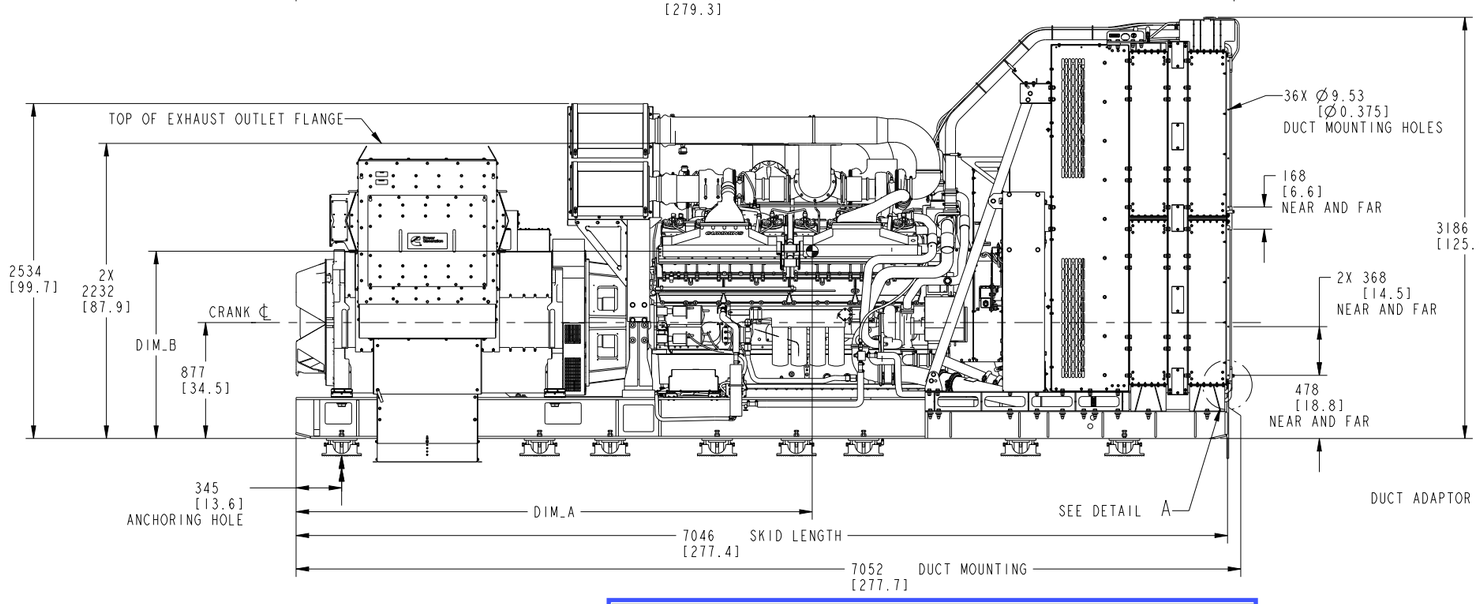

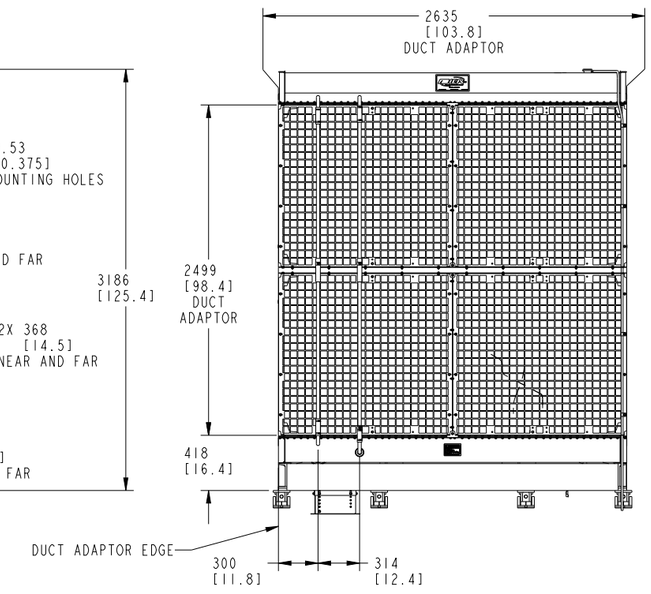

TABULATION

GEN FRAME SIZE	DIM 'A' CENTER OF GRAVITY	DIM 'B' CENTER OF GRAVITY	GENSET WEIGHT (DRY)		GENSET WEIGHT (WET)	
			KGS	LBS	KGS	LBS
LVS1804W2	3160	1000	20788	45830	21851	48173
LVS1804X2	3141	1000	20848	45962	21911	48306
MV/HVS1804W2	3169	1000	20703	45642	21766	47986
MV/HVS1804X2	3150	1000	20762	45772	21825	48116
LVS1804S2	3417	1014	18571	40942	19634	43286
LVS1804T2	3370	1011	18982	41848	20045	44192
MV/HVS1804T2	3379	1011	18897	41661	19960	44004

Cummins Inc.
DIMENSIONS ARE IN: MILLIMETERS
[ ] ARE IN: -
SIZE: D
SCALE:1:20
DIMENSIONING AND TOLERANCING PER:
ASME Y14.5-2009
THIRD ANGLE PROJECTION
CAD SYSTEM
PTC® Creo® Parametric

Document Generated: **10APR2020 20:47 GMT**

Cummins Data Classification:
Cummins Confidential

This document (and the information shown thereon) is **Confidential and Proprietary** and shall not be disclosed to others in hard copy or electronic form, reproduced by any means, or used for any purpose without written consent of Cummins Inc.

Part Number: **A054H274** Part Revision: **C**
Part Name: **OUTLINE,GENSET**
Drawing Category: **Detail** State: **Released**

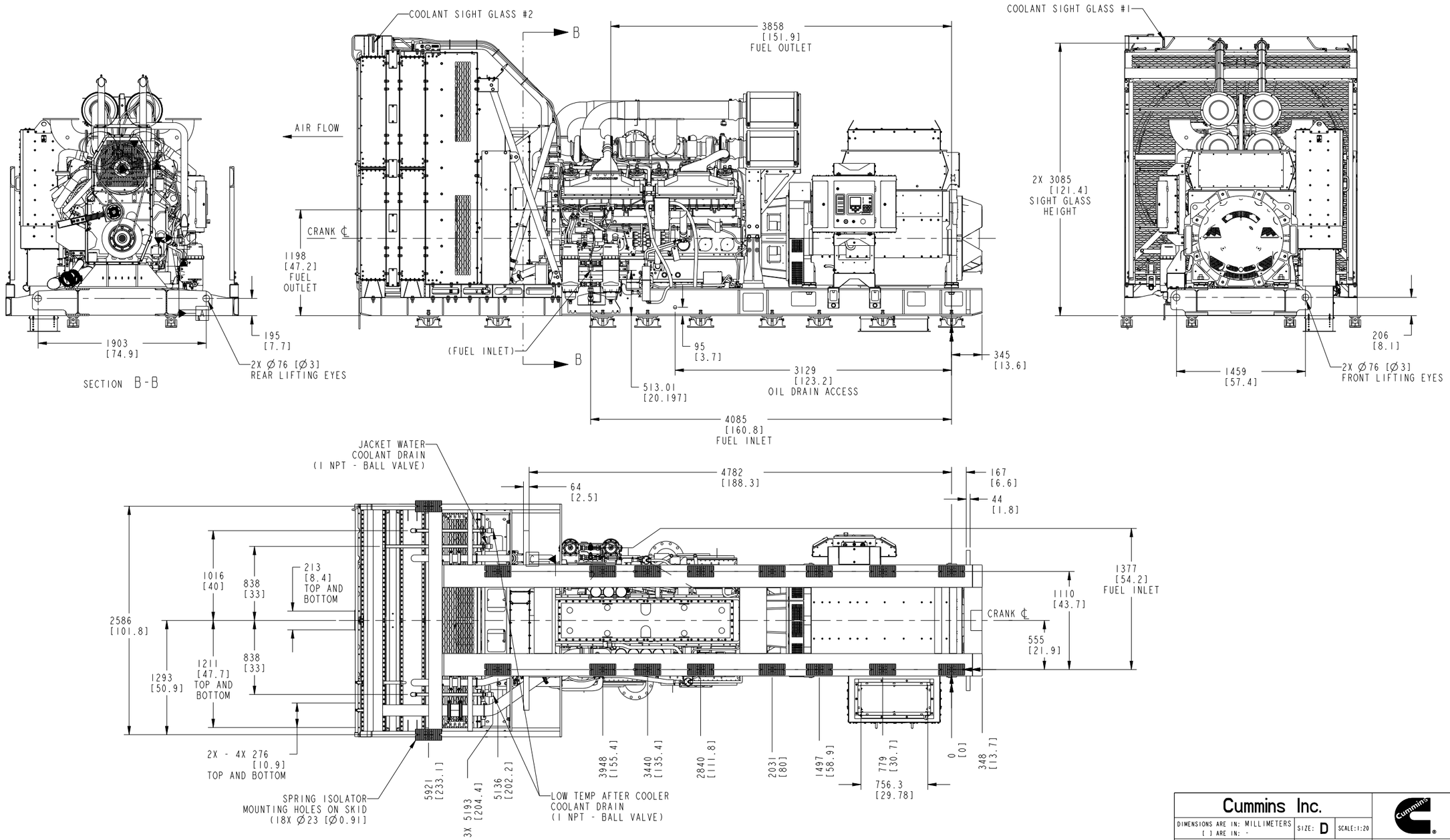

Document Generated: **10APR2020 20:47 GMT**

Cummins Data Classification:
Cummins Confidential

This document (and the information shown thereon) is **Confidential and Proprietary** and shall not be disclosed to others in hard copy or electronic form, reproduced by any means, or used for any purpose without written consent of Cummins Inc.

Part Number: **A054H274** Part Revision: **C**

Part Name: **OUTLINE,GENSET**

Drawing Category: **Detail** State: **Released**

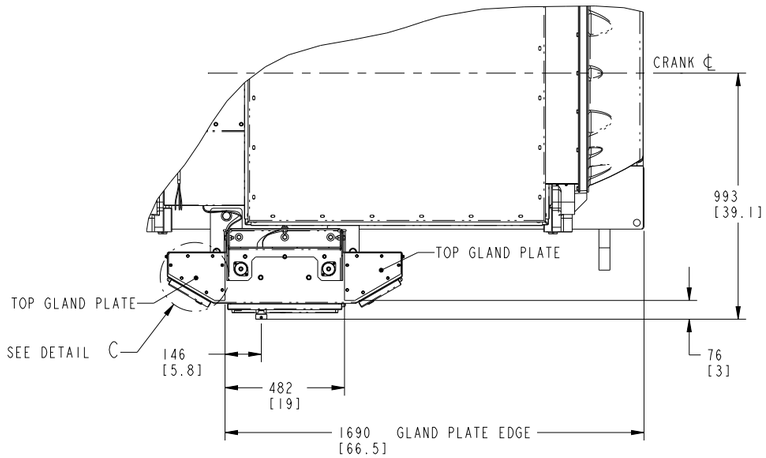

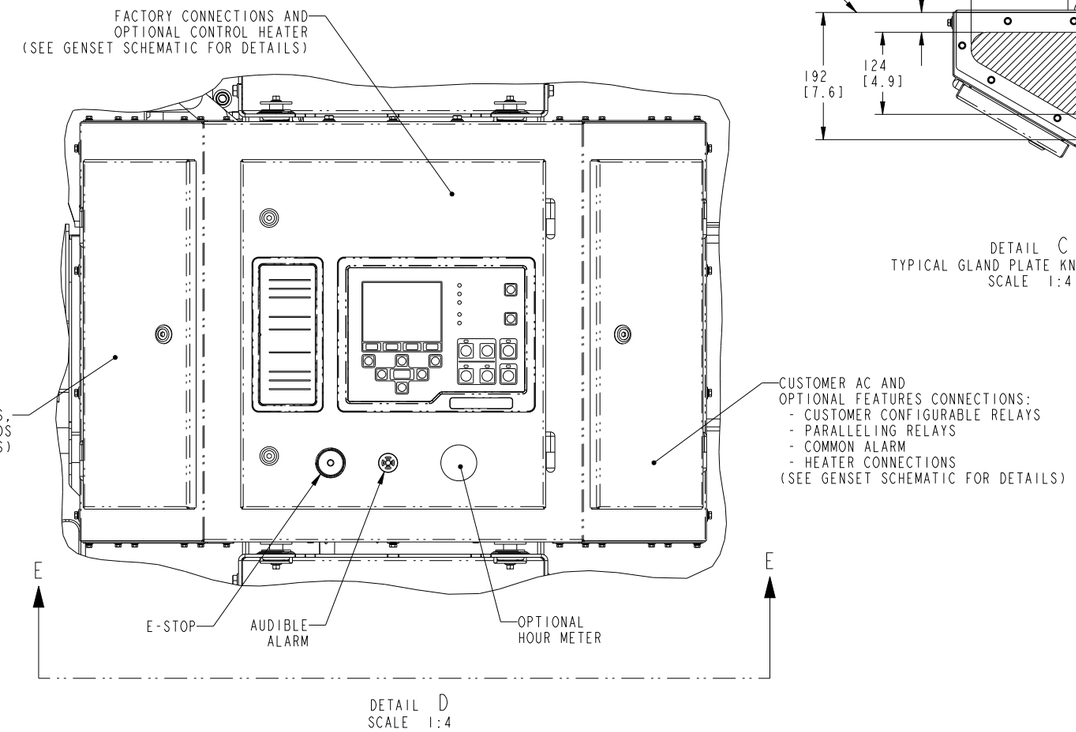

DETAIL D
SCALE 1:4

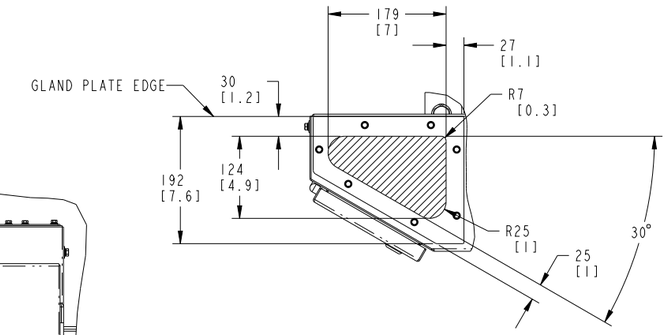

DETAIL C
TYPICAL GLAND PLATE KNOCKOUT AREA
SCALE 1:4

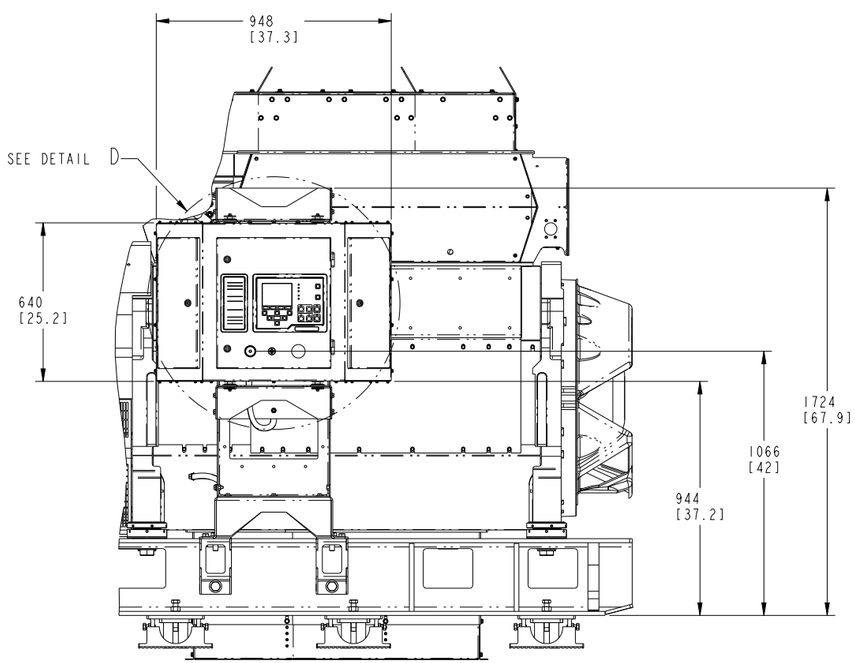

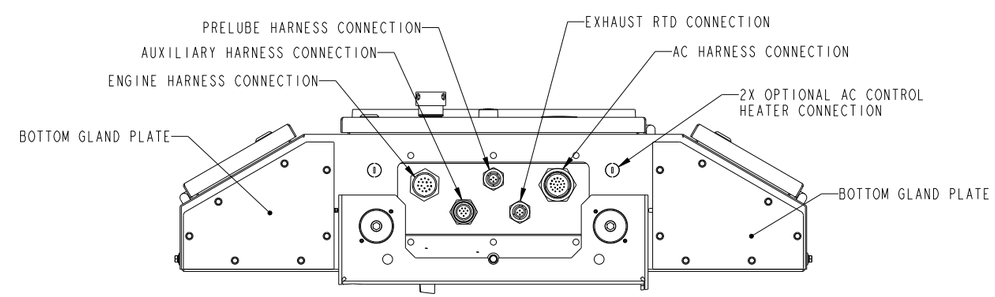

SECTION E-E
SCALE 1:4

CONTROL BOX

Cummins Inc.		
DIMENSIONS ARE IN: MILLIMETERS [ ] ARE IN: -	SIZE: D	SCALE:3:32
DIMENSIONING AND TOLERANCING PER: ASME Y14.5-2009	THIRD ANGLE PROJECTION	CAD SYSTEM PTC® Creo® Parametric

Document Generated: **10APR2020 20:47 GMT**

Cummins Data Classification:
Cummins Confidential

This document (and the information shown thereon) is **Confidential and Proprietary** and shall not be disclosed to others in hard copy or electronic form, reproduced by any means, or used for any purpose without written consent of Cummins Inc.

Part Number: **A054H274** Part Revision: **C**

Part Name: **OUTLINE,GENSET**

Drawing Category: **Detail** State: **Released**

LIFTING ARRANGEMENT FOR GENSET

FOR C OF G VALUE REFER TO SHEET 2

1. IDEAL
LIFTING FRAME AND STROPS

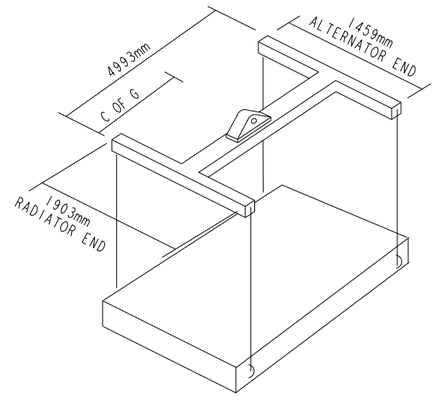

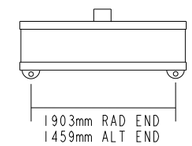

2. NEXT BEST
SPREADERS, BROTHERS AND STROPS

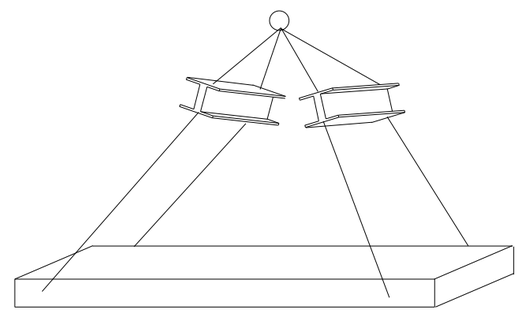

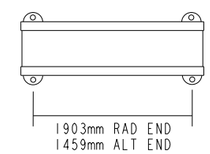

3. STROPS
PROTECTION REQUIRED TO PREVENT DAMAGE TO
UNIT AND NYLON STROPS WHERE THEY COME
INTO CONTACT

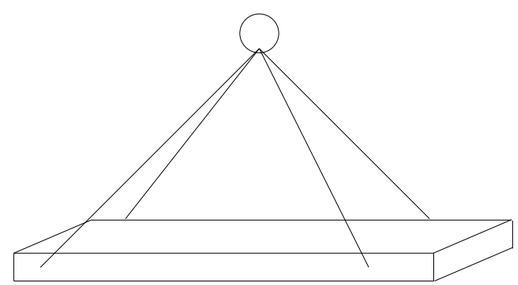

Cummins Inc.		
DIMENSIONS ARE IN: MILLIMETERS [ ] ARE IN: -	SIZE: D SCALE:1:20	
DIMENSIONING AND TOLERANCING PER: ASME Y14.5-2009	THIRD ANGLE PROJECTION	CAD SYSTEM PTC® Creo® Parametric

Document Generated: **10APR2020 20:47 GMT**

Cummins Data Classification:
Cummins Confidential

This document (and the information shown thereon) is **Confidential and Proprietary** and shall not be disclosed to others in hard copy or electronic form, reproduced by any means, or used for any purpose without written consent of Cummins Inc.

Part Number: **A054H274** Part Revision: **C**

Part Name: **OUTLINE,GENSET**

Drawing Category: **Detail** State: **Released**

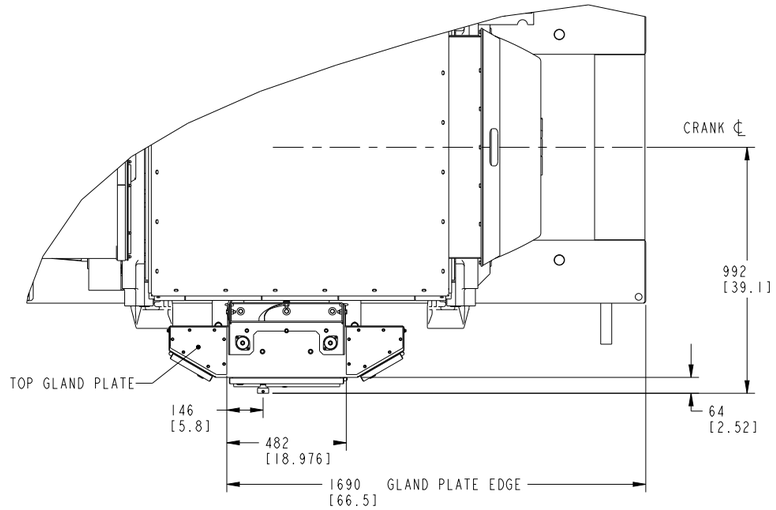

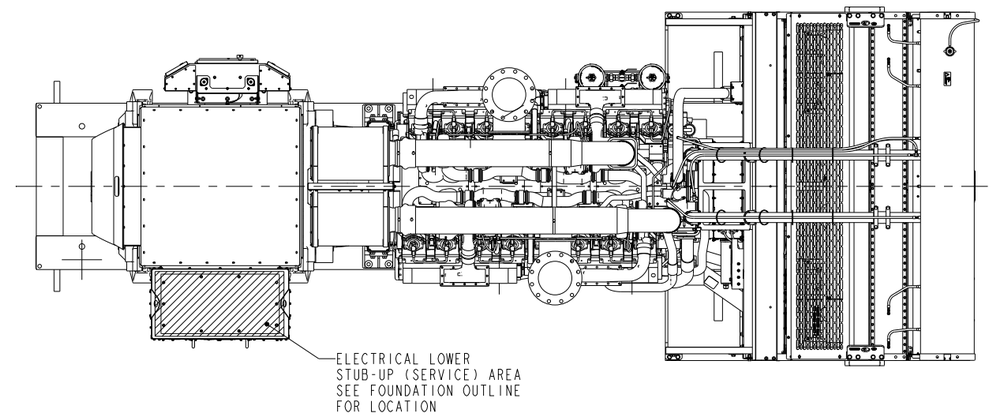

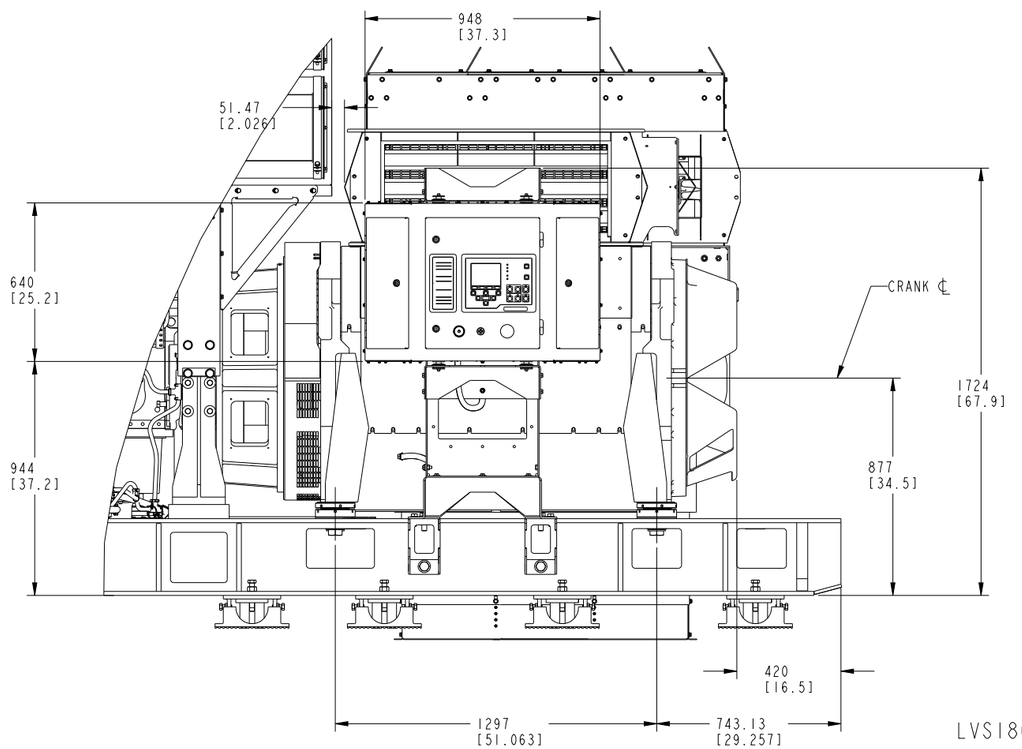

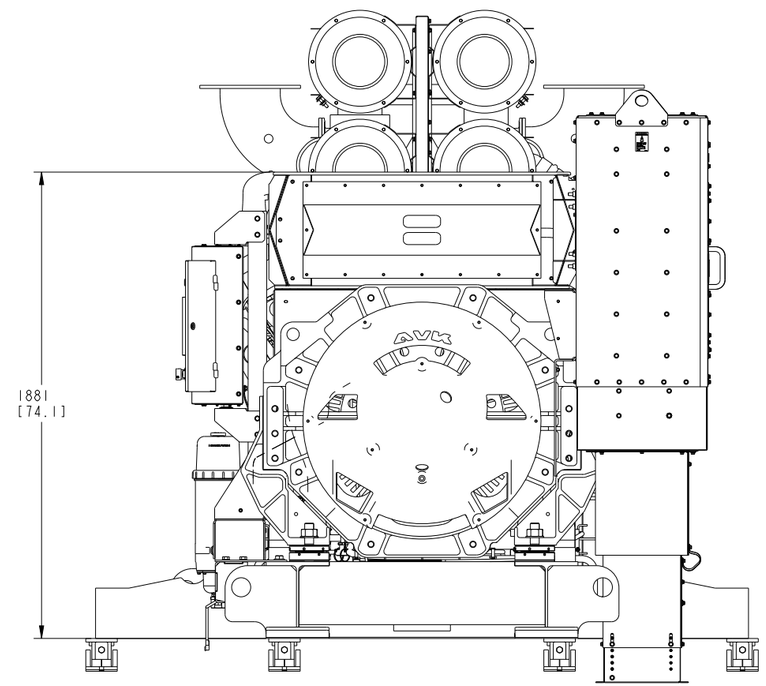

LVSI804S2 / LVSI804T2 / MV/HVSI804T2

Cummins Inc.		
DIMENSIONS ARE IN: MILLIMETERS [ ] ARE IN: -	SIZE: D	SCALE:1:20
DIMENSIONING AND TOLERANCING PER: ASME Y14.5-2009	THIRD ANGLE PROJECTION	CAD SYSTEM PTC® Creo® Parametric

Document Generated: **10APR2020 20:47 GMT**

Cummins Data Classification:
Cummins Confidential

This document (and the information shown thereon) is **Confidential and Proprietary** and shall not be disclosed to others in hard copy or electronic form, reproduced by any means, or used for any purpose without written consent of Cummins Inc.

Part Number: **A054H274** Part Revision: **C**

Part Name: **OUTLINE,GENSET**

Drawing Category: **Detail** State: **Released**

NOTES:

1. (NOTE REMOVED)

2. MAXIMUM INSTALLED WEIGHT
   DRY - 41.3 KG
   WET - 57.6 KG (WHEN FUEL LEVEL REACHES THE CHANGE FILTER LINE)

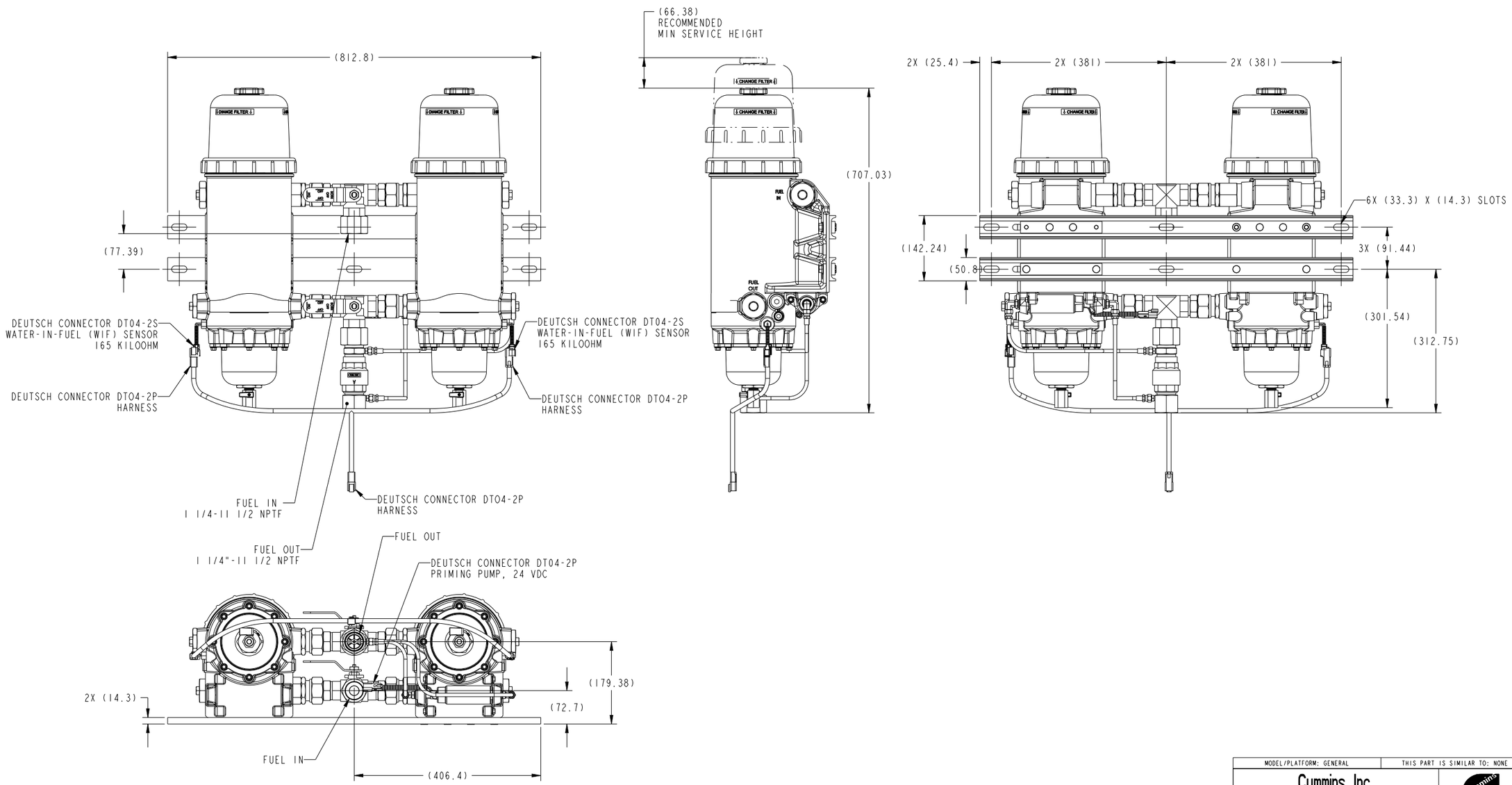

MODEL/PLATFORM: GENERAL	THIS PART IS SIMILAR TO: NONE
Cummins Inc.	
DIMENSIONS ARE IN: MILLIMETERS [ ] ARE IN: -	SIZE: D SCALE:1:4
DIMENSIONING AND TOLERANCING PER: ASME Y14.5-2009	THIRD ANGLE PROJECTION CAD SYSTEM PTC® Creo® Parametric

Document Generated: **02MAR2021 20:34 GMT**

Cummins Data Classification:
Cummins Confidential

This document (and the information shown thereon) is **Confidential and Proprietary** and shall not be disclosed to others in hard copy or electronic form, reproduced by any means, or used for any purpose without written consent of Cummins Inc.

Part Number: **A055Y798** Part Revision: **B**

Part Name: **FILTER,FUEL**

Drawing Category: **Detail** State: **Released**

PTC® Creo® Parametric

REL NO	LTR	NO	REVISION	DWN	CKD	APVD	DATE
ECO-166203	C	1	ZONES A5,A6,B5,B6;UPDATE VIEW PICTORIALLY	TDV	DPA	H.KHOR	20JAN17

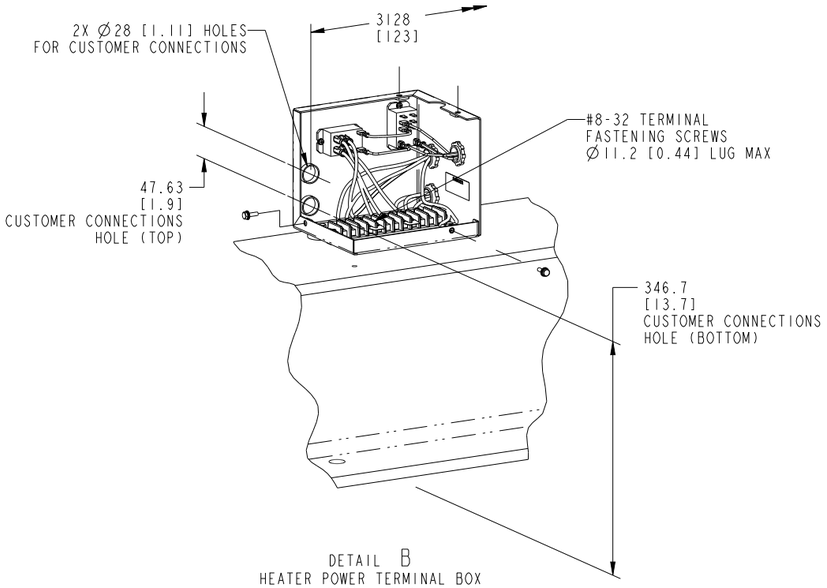

DETAIL B
HEATER POWER TERMINAL BOX
SCALE 1:4

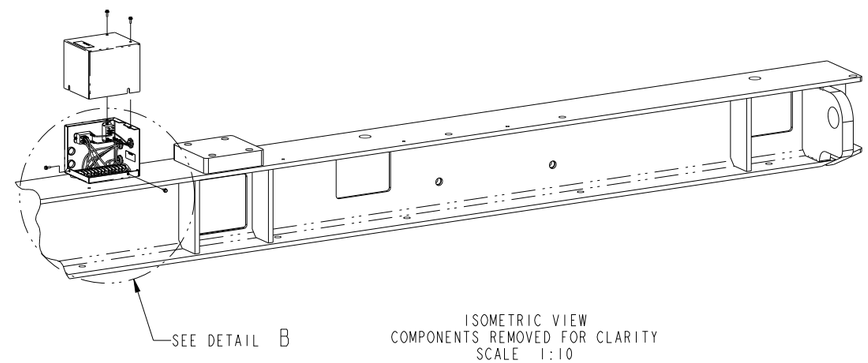

ISOMETRIC VIEW
COMPONENTS REMOVED FOR CLARITY
SCALE 1:10

NOTES:

1. DIMENSIONS IN [ ] ARE INCHES.
2. ALL DIMENSIONS ARE REFERENCE BASED ON CAD DATA.
3. THE HEATER CONTROL RELAY DRAWS 83mA OF CURRENT WHEN THE HEATERS ARE UNPOWERED.
   3.1 HEATERS ARE NOT POWERED WHEN THE ENGINE HAS REACHED DESIGN TEMPERATURE OR
   3.2 THE ENGINE IS RUNNING.
4. JUMPERS ARE FACTORY INSTALLED IN THE 480 VOLT CONFIGURATION FOR 240 - 208 VOLT MOVE JUMPERS AS SHOWN
5. ⚠ A BATTERY CHARGER IS REQUIRED TO PREVENT BATTERY DISCHARGE.

4 480 VOLT CONNECTION

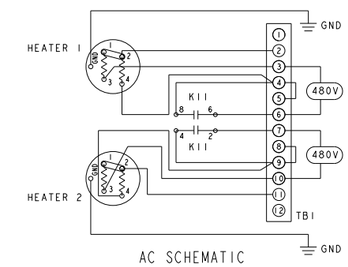

AC SCHEMATIC

4 240 - 208 VOLT CONNECTION

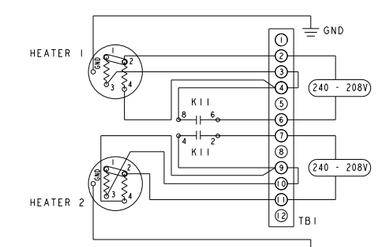

AC SCHEMATIC

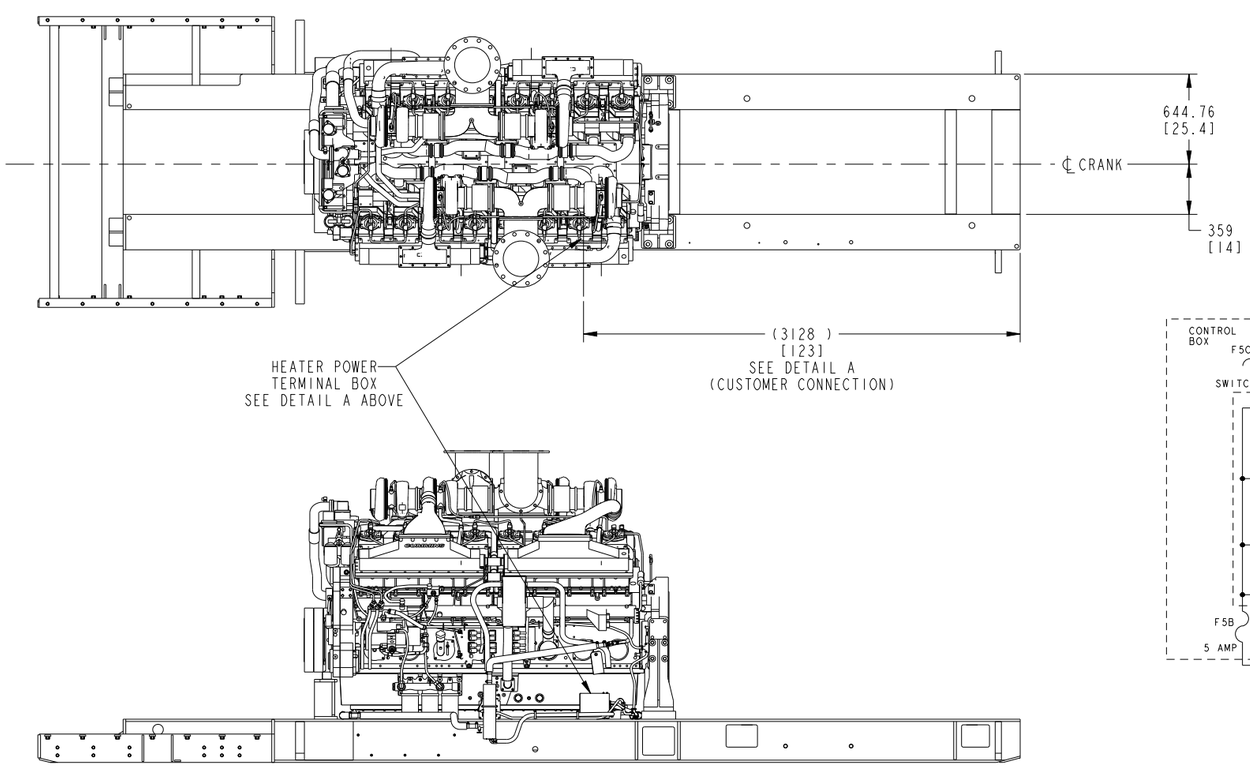

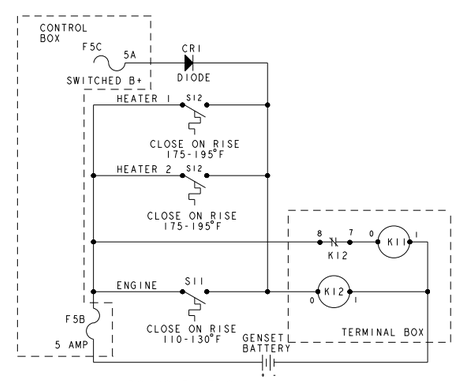

DC SCHEMATIC

HEATER AMPERAGE TABLE

SINGLE PHASE HEATER VOLTAGE	FEATURE CODE H556 TWO HEATERS			FEATURE CODE H557 TWO HEATERS		
	HEATER AMPS	TOTAL AMPS	TOTAL WATTS	HEATER AMPS	TOTAL AMPS	TOTAL WATTS
208	18.0	36.0	7485	23.1	46.3	9630
240	20.8	41.6	9980	26.8	53.5	12840
480	10.4	20.8	9980	13.4	26.8	12840

UNLESS OTHERWISE SPECIFIED ALL DIMENSIONS ARE IN MILLIMETERS

.X ±	0.20	4.99	12.70
.XX ±	0.08	1.99	5.08
.XXX ±	0.05	1.27	3.18
.XXXX ±	0.03	0.76	2.03
ANG TOL ±	1.0°	17.50	24.99
		0.38	0.76
		0.13	0.38
		0.08	0.13

SCALE: 1:20

SIM TO .
DO NOT SCALE PRINT
- CONFIDENTIAL -
PROPERTY OF CUMMINS POWER GENERATION GROUP

DWN D. CARPENTER
CKD J. CRAWFORD
APVD R. GERASCH
DATE 02MAY13
FOR INTERPRETATION OF DIMENSIONING AND TOLERANCING, SEE ASME Y14.5M-1994
FIRST USED ON DOKAN

CUMMINS POWER GENERATION
OUTLINE, HEATER INTERFACE
SITE CODE .
PGF
SIZE D
A046E742
SHEET 1 OF 1
DWG REV C

Drawing Name: A046E743 Revision: C
Part Name: A046E742 Revision: C
ECO-166203 Sheet 1 of 2

Creo Schematics

REL NO	LTR	NO	REVISION	DWN	CKD	APVD	DATE
ECO-172188	B	1	ADD NOTE 23	PS	NS	J.BELL	13DEC18
		2	SEE SHEET 3	PS	NS	J.BELL	13DEC18
		3	SEE SHEET 3	PS	NS	J.BELL	13DEC18
		4	SEE SHEET 3	PS	NS	J.BELL	13DEC18
		5	ADD SHEET 14	PS	NS	J.BELL	13DEC18

12. AUX101 BOARD SPECIFICATIONS (SHEET 11)
    12.1 CUSTOMER INPUTS
        12.1.1 TYPE=DISCRETE OR ANALOG
        NUMBER=8
        MAX. VOLTAGE ALLOWED AT ANY INPUT: -10-24 VDC (1-6)
        40 VDC (7,8)
        DIFFERENTIAL VOLTAGE RANGE: -4.9-5V (INPUTS 1,2)
        0-5V (INPUTS 3-6)
        0-38V (INPUTS 7,8)
        INPUTS CONNECTIONS=J11

    12.2 CUSTOMER OUTPUTS
        12.2.1 CURRENT SOURCES=J10-3,4,5,6 (1mA- 20mA)
        12.2.2 VOLTAGE SOURCES=J1-7,8 (5VDC, 20mA)
        12.2.3 GROUND=J10-9,10,11,12

    12.3 OUTUPUT RELAYS
        12.3.1 TYPE=NON-LATCHING
        12.3.2 NUMBER=8
        12.3.3 CONTACTS=1 FORM C
        250VAC OR 30VDC
        NC CONTACTS=3A
        NO CONTACTS=5A
        12.3.4 CONNECTIONS=J2, J3, J4

13. ALL RELAYS SHOWN IN RESET OR DE-ENERGIZED POSITION DO NOT MAINTAIN THE LAST STATE WHEN POWER IS LOST (SHEET 11).

14. OUTPUT RELAYS ARE CONTROLLED VIA THE NETWORK (SHEET 11).

15. TIE J1-1 AND J1-5 TO HOLD DEVICE IN WAKE UP STATE (SHEET 11).

16. DISPLAYS THE DEVICE NUMBER. IF MORE THAN ONE AUX 101 IS CONNECTED ON NETWORK BOTH NEED A UNIQUE DEVICE NUMBER (SHEET 11).

17. CONNECT J2 RING TERMINAL TO A GOOD EARTH GROUND. USE AN EXTERNAL TOOTH LOCKWASHER BETWEEN RING AND GROUNDING SURFACE (SHEET 11).

18. DIGITAL INPUTS NEED THE (-) INPUT GROUNDED (SHEET 11).

19. DS1 INDICATES ACTIVE NETWORK COMMUNICATION.
    DS2 INDICATES NO NETWORK CONNECTIVITY.
    (SHEET 11)

20. DS3-DS10 (GREEN) INDICATE WHICH RELAYS ARE ENERGIZED (SHEET 11)

21. RTD SENDERS CAN ONLY BE USED ON INPUTS 3-6 (SHEET 11).

22. PROGRAMMABLE CURRENT SOURCE USE (SHEET 11)
    CS1 IS USED FOR INPUT 3 ONLY
    CS2 IS USED FOR INPUT 4 ONLY
    CS3 IS USED FOR INPUT 5 ONLY
    CS4 IS USED FOR INPUT 6 ONLY

23. TWO STARTERS OPTION REFERS TO SHEET 3.
    FOUR STARTERS OPTION REFERS TO SHEET 14.

NOTES

1. REMOVABLE JUMPER WIRE FOR REMOTE E-STOP IS CONNECTED ON THE LOAD SIDE

2. CTB4,5,6-4 OUTPUTS FUSED AT 20 AMPS

3. CTB7,8,9-4 (MAX CURRENT=30 AMPS)

4. NOMINAL CONDUCTOR SIZE PER TERMINAL 26-12 AWG

5. WIRE TYPE, USE 60°C RATED MINIMUM, STRANDED COPPER WIRE

6. STRIP WIRE LENGTH TO 10.0MM

7. TO REMOVE WIRES FROM TERMINAL BLOCK, PUSH IN ORANGE TAB NEXT TO WIRE TERMINATION

8. LOW SIDE DRIVER OUTPUT RATED AT 250mA, 3A IN-RUSH 30VDC, 100 MICRO-A LEAKAGE IN OFF STATE. SURGE SUPPRESION DIDOE REQUIRED FOR INDUCTIVE COILS.

9. RELAY OUTPUT RATED AT 3.5A 30VDC, 250VAC.

10. TO CONNECT TO OPTIONAL GROUND FAULT RELAY REMOVE SAFETY SHORTING BLOCK FROM HARNESS AND CONNECT TO GROUND FAULT RELAY TERMINALS.

11. CROSS REFERENCE WIRES ARE ON THE FOLLOWING FORMAT:

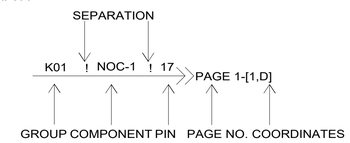

SIM TO	DWN A.BORROTO		CUMMINS POWER GENERATION
DO NOT SCALE PRINT	CKD A.BORROTO		SCHEMATIC, WIRING (60L)
	APVD P.BAKER		
	DATE 11JAN16	SITE CODE	
CONFIDENTIAL PROPERTY OF CUMMINS POWER GENERATION GROUP	FOR INTERPRETATION OF DIMENSIONING AND TOLERANCING, SEE ASME Y14.5M-1994 / FIRST USED ON DQKAN	PGF	DWG SIZE D / A054B158 / SHEET 1 OF 14 / DWG REV B

Creo Schematics

REL NO	LTR	NO	REVISION	DWN	CKD	APVD	DATE
ECO-172188	B	-	--	PS	NS	J.BELL	13DEC18

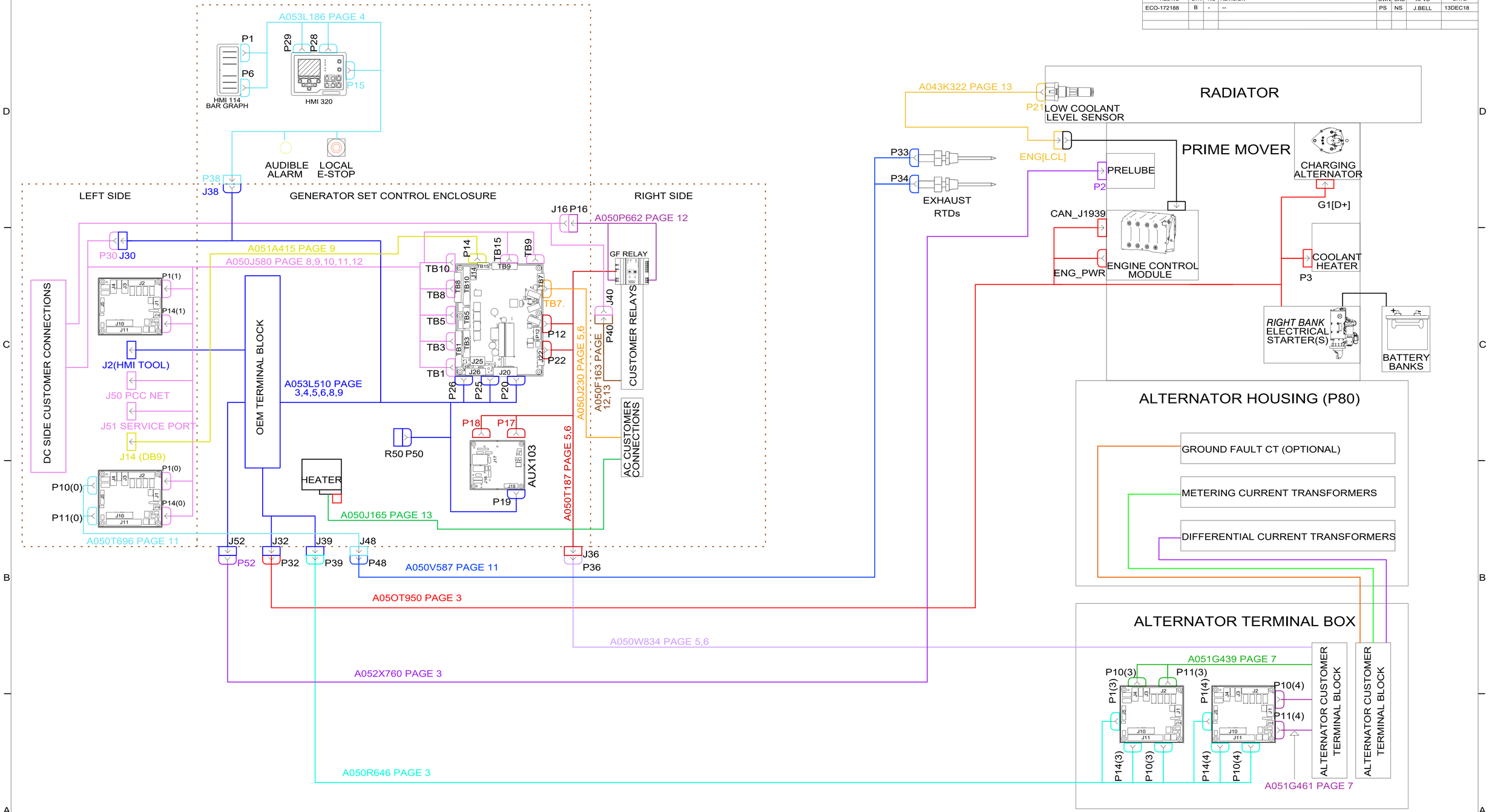

QSK60 (P80)
PCC 3.3

SIM TO	DWN A.BORROTO		CUMMINS POWER GENERATION
DO NOT SCALE PRINT	CKD A.BORROTO		SCHEMATIC, WIRING (60L)
	APVD P.BAKER		
	DATE 11JAN16	SITE CODE	
CONFIDENTIAL PROPERTY OF CUMMINS POWER GENERATION GROUP	FOR INTERPRETATION OF DIMENSIONING AND TOLERANCING, SEE ASME Y14.5M-1994 / FIRST USED ON DQKAN	PGF	DWG SIZE D / A054B158 / SHEET 2 OF 14 / DWG REV B

Creo Schematics

REL NO	LTR	NO	REVISION	DWN	CKD	APVD	DATE
ECO-172188	B	2	ZONE C5,D5 UPDATE PICTORIALLY	PS	NS	J.BELL	13DEC18
		3	ZONE D5 ADD NOTE "OPTION --- SHEET 14"	PS	NS	J.BELL	13DEC18
		4	ZONE D5 ADD NOTE "RIGHT BANK STARTER"	PS	NS	J.BELL	13DEC18

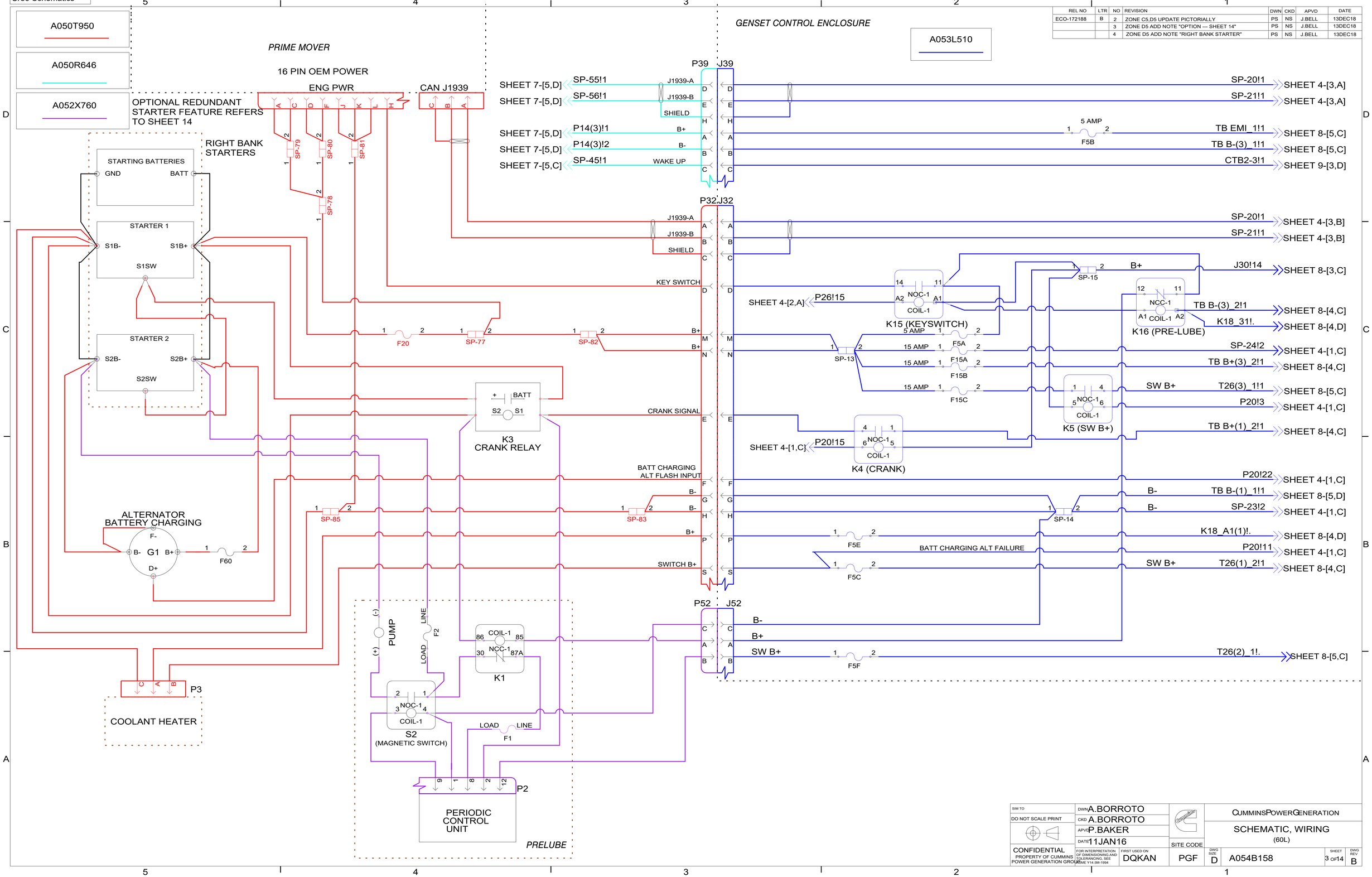

SIM TO	DWN A.BORROTO	CUMMINS POWER GENERATION	
DO NOT SCALE PRINT	CKD A.BORROTO	SCHEMATIC, WIRING (60L)	
	APVD P.BAKER		
	DATE 11JAN16	SITE CODE	
CONFIDENTIAL PROPERTY OF CUMMINS POWER GENERATION GROUP	FOR INTERPRETATION OF DIMENSIONING AND TOLERANCING, SEE ASME Y14.5M-1994	FIRST USED ON DQKAN	PGF

DWG SIZE		SHEET	DWG REV
D	A054B158	3 OF 14	B

Drawing Name: A054B160 Revision: B
Part Name: A054B158 Revision: B
ECO-172188 Sheet 3 of 15

Creo Schematics

REL NO	LTR	NO	REVISION	DWN	CKD	APVD	DATE
ECO-172188	B	-	--	PS	NS	J.BELL	13DEC18

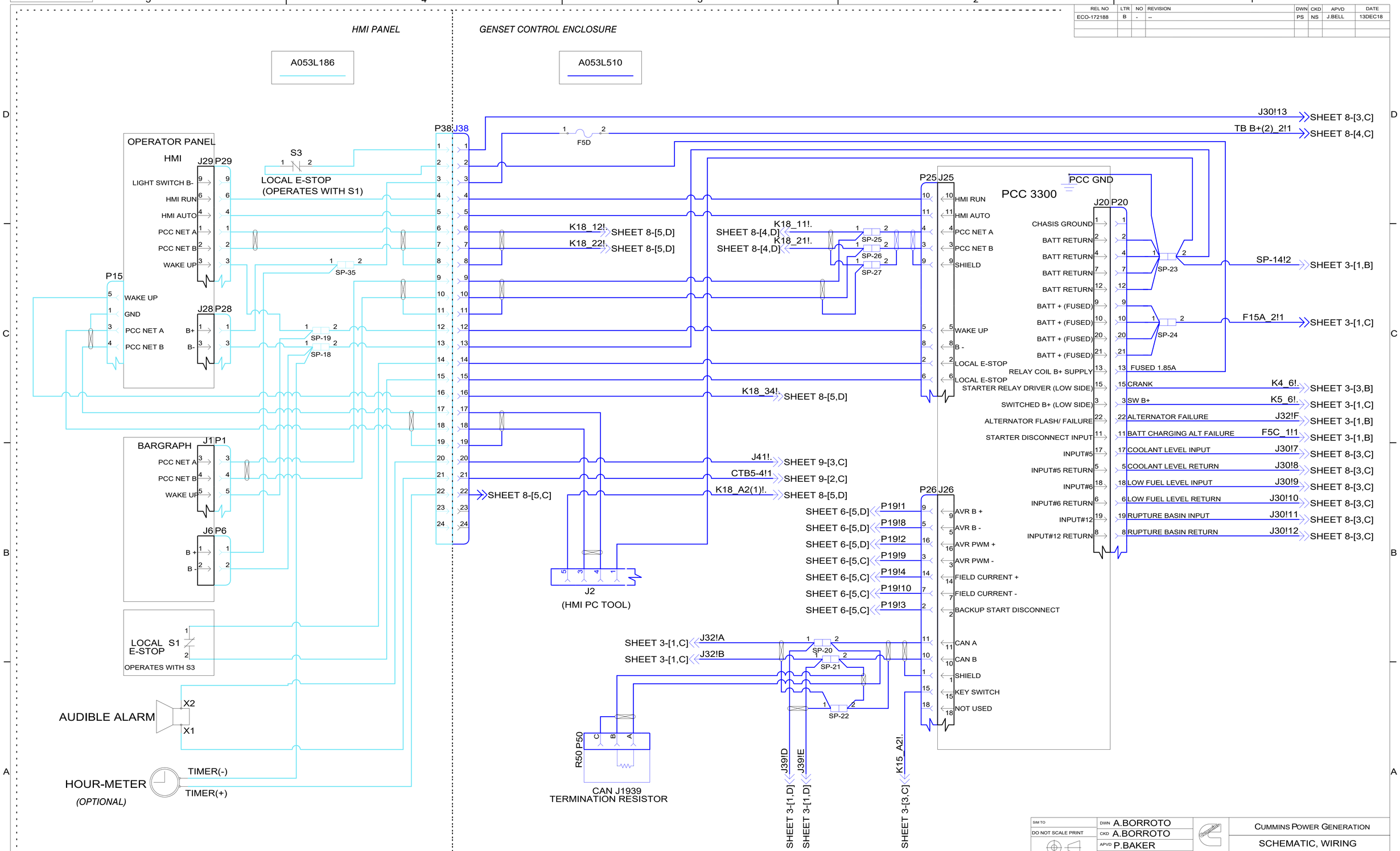

SIM TO	DWN A.BORROTO	CUMMINS POWER GENERATION	
DO NOT SCALE PRINT	CKD A.BORROTO	SCHEMATIC, WIRING (60L)	
	APVD P.BAKER		
CONFIDENTIAL PROPERTY OF CUMMINS POWER GENERATION GROUP	DATE 11JAN16	SITE CODE	
FOR INTERPRETATION OF DIMENSIONING AND TOLERANCING, SEE ASME Y14.5M-1994	FIRST USED ON DQKAN	PGF	DWG SIZE D · A054B158 · SHEET 4 OF 14 · DWG REV B

Drawing Name: A054B160 Revision: B
Part Name: A054B158 Revision: B
ECO-172188 Sheet 4 of 15

Creo Schematics

REL NO	LTR	NO	REVISION	DWN	CKD	APVD	DATE
ECO-172188	B	-	--	PS	NS	J.BELL	13DEC18

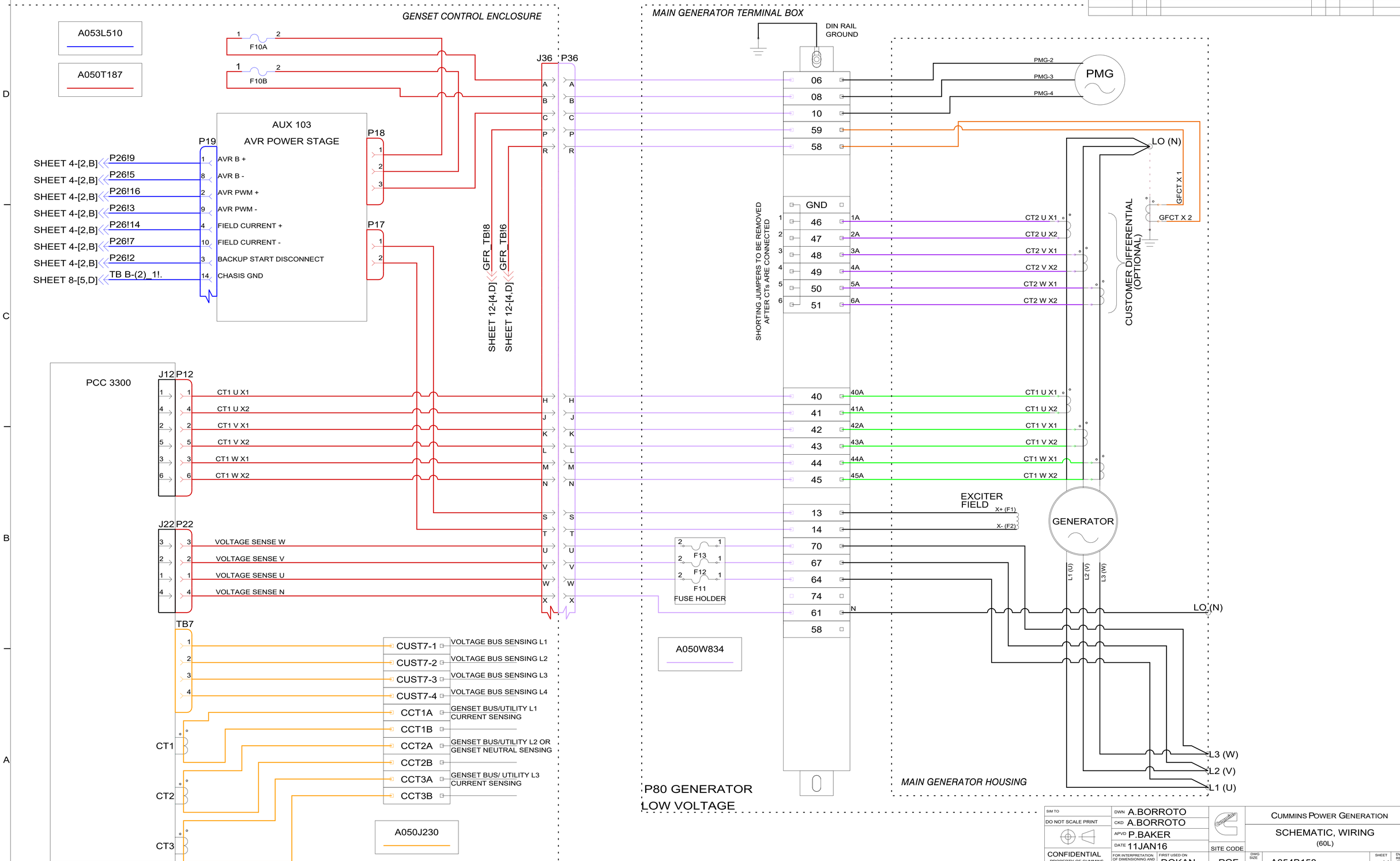

SIM TO	DWN A.BORROTO		CUMMINS POWER GENERATION
DO NOT SCALE PRINT	CKD A.BORROTO		SCHEMATIC, WIRING (60L)
	APVD P.BAKER		
	DATE 11JAN16	SITE CODE	
CONFIDENTIAL PROPERTY OF CUMMINS POWER GENERATION GROUP	FOR INTERPRETATION OF DIMENSIONING AND TOLERANCING, SEE ASME Y14.5M-1994 / FIRST USED ON DQKAN	PGF	DWG SIZE D / A054B158 / SHEET 5 OF 14 / DWG REV B

Drawing Name: A054B160 Revision: B
Part Name: A054B158 Revision: B
ECO-172188 Sheet 5 of 15

Creo Schematics

REL NO	LTR	NO	REVISION	DWN	CKD	APVD	DATE
ECO-172188	B	-	--	PS	NS	J.BELL	13DEC18

A050R646

A051G439

A051G461

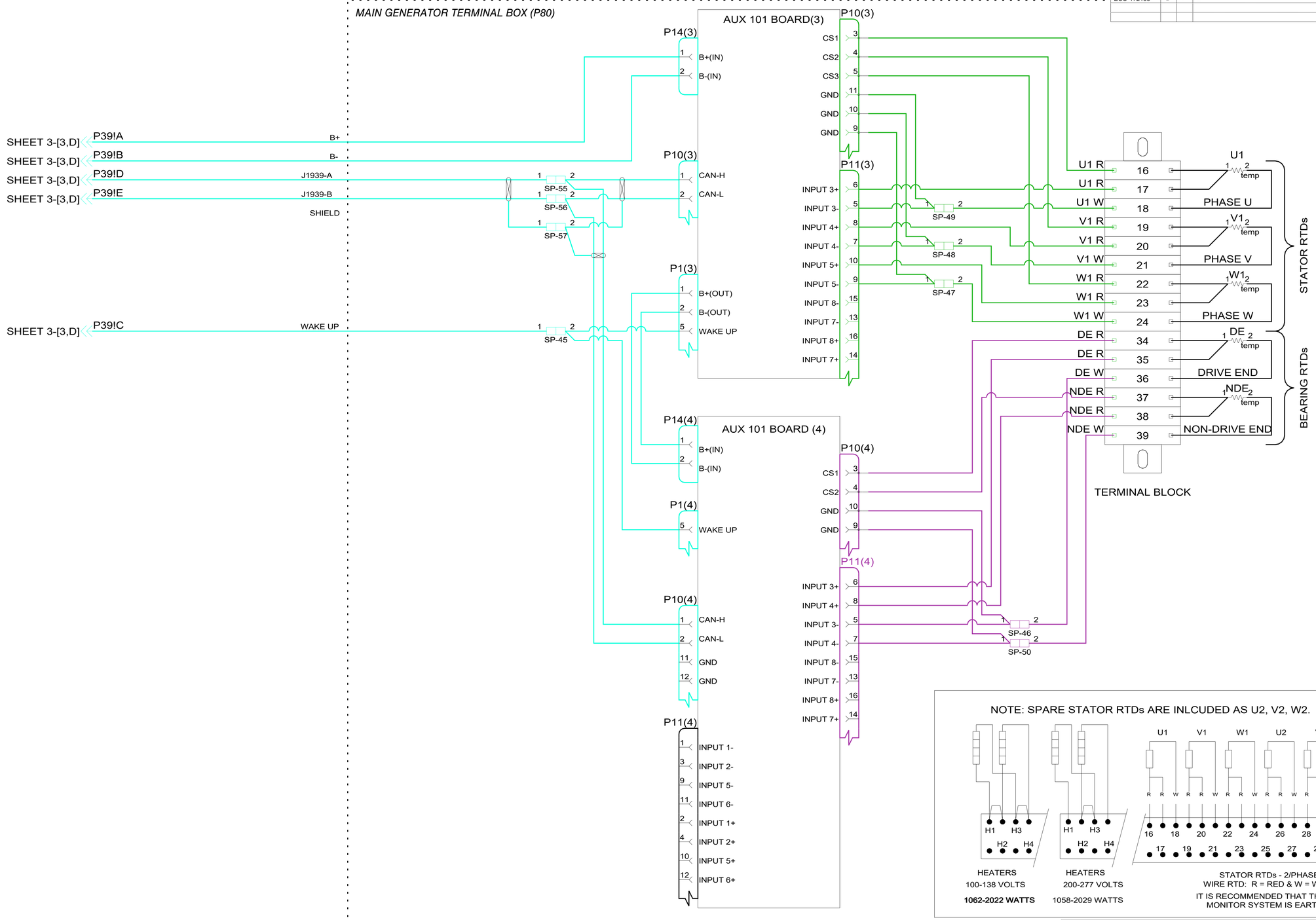

NOTE: SPARE STATOR RTDs ARE INLCUDED AS U2, V2, W2.

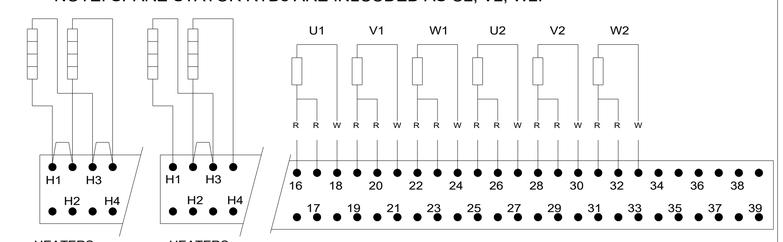

HEATERS
100-138 VOLTS
1062-2022 WATTS

HEATERS
200-277 VOLTS
1058-2029 WATTS

STATOR RTDs - 2/PHASE
WIRE RTD: R = RED & W = WHITE
IT IS RECOMMENDED THAT THE RTD MONITOR SYSTEM IS EARTHED

SIM TO	DWN A.BORROTO		CUMMINS POWER GENERATION
DO NOT SCALE PRINT	CKD A.BORROTO		SCHEMATIC, WIRING (60L)
	APVD P.BAKER		
	DATE 11JAN16	SITE CODE	
CONFIDENTIAL PROPERTY OF CUMMINS POWER GENERATION GROUP	FOR INTERPRETATION OF DIMENSIONING AND TOLERANCING, SEE ASME Y14.5M-1994 / FIRST USED ON DQKAN	PGF	DWG SIZE D / A054B158 / SHEET 7 OF 14 / DWG REV B

Creo Schematics

REL NO	LTR	NO	REVISION	DWN	CKD	APVD	DATE
ECO-172188	B	-	--	PS	NS	J.BELL	13DEC18

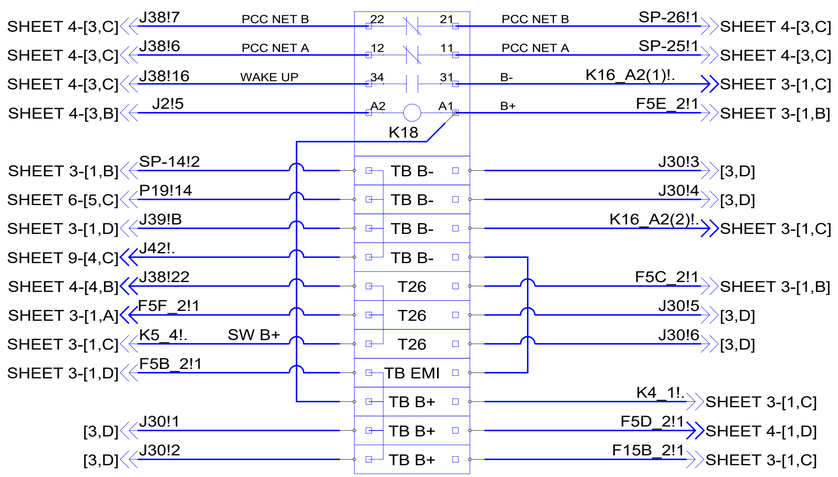

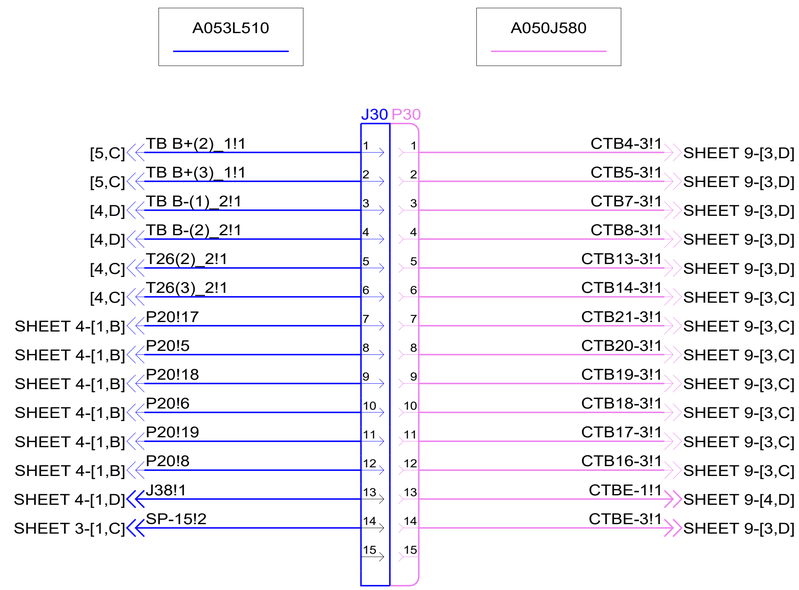

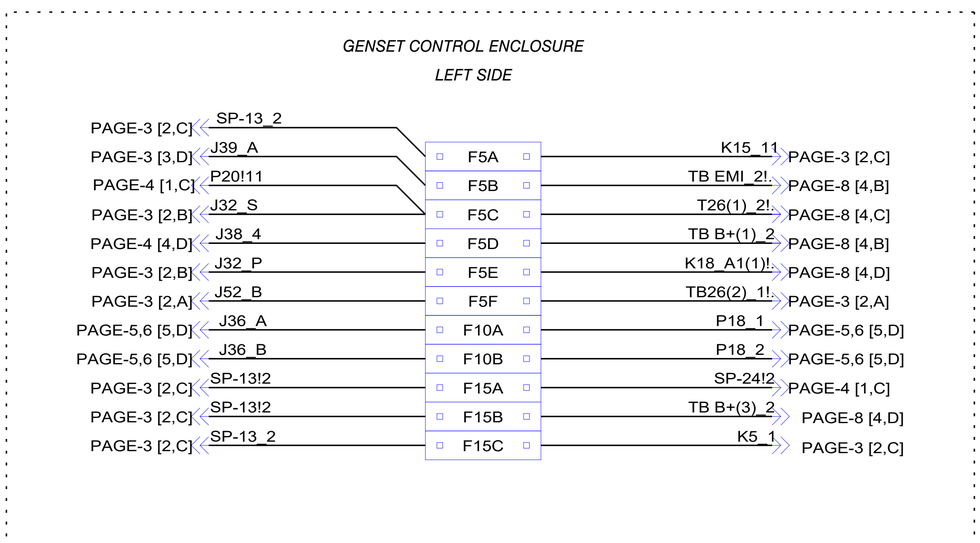

SIM TO	DWN A.BORROTO		CUMMINS POWER GENERATION
DO NOT SCALE PRINT	CKD A.BORROTO		SCHEMATIC, WIRING (60L)
	APVD P.BAKER		
	DATE 11JAN16	SITE CODE	
CONFIDENTIAL PROPERTY OF CUMMINS POWER GENERATION GROUP	FOR INTERPRETATION OF DIMENSIONING AND TOLERANCING, SEE ASME Y14.5M-1994 / FIRST USED ON DQKAN	PGF	DWG SIZE D / A054B158 / SHEET 8 OF 14 / DWG REV B

Drawing Name: A054B160 Revision: B
Part Name: A054B158 Revision: B
ECO-172188 Sheet 8 of 15

Creo Schematics

REL NO	LTR	NO	REVISION	DWN	CKD	APVD	DATE
ECO-172188	B	-	--	PS	NS	J.BELL	13DEC18

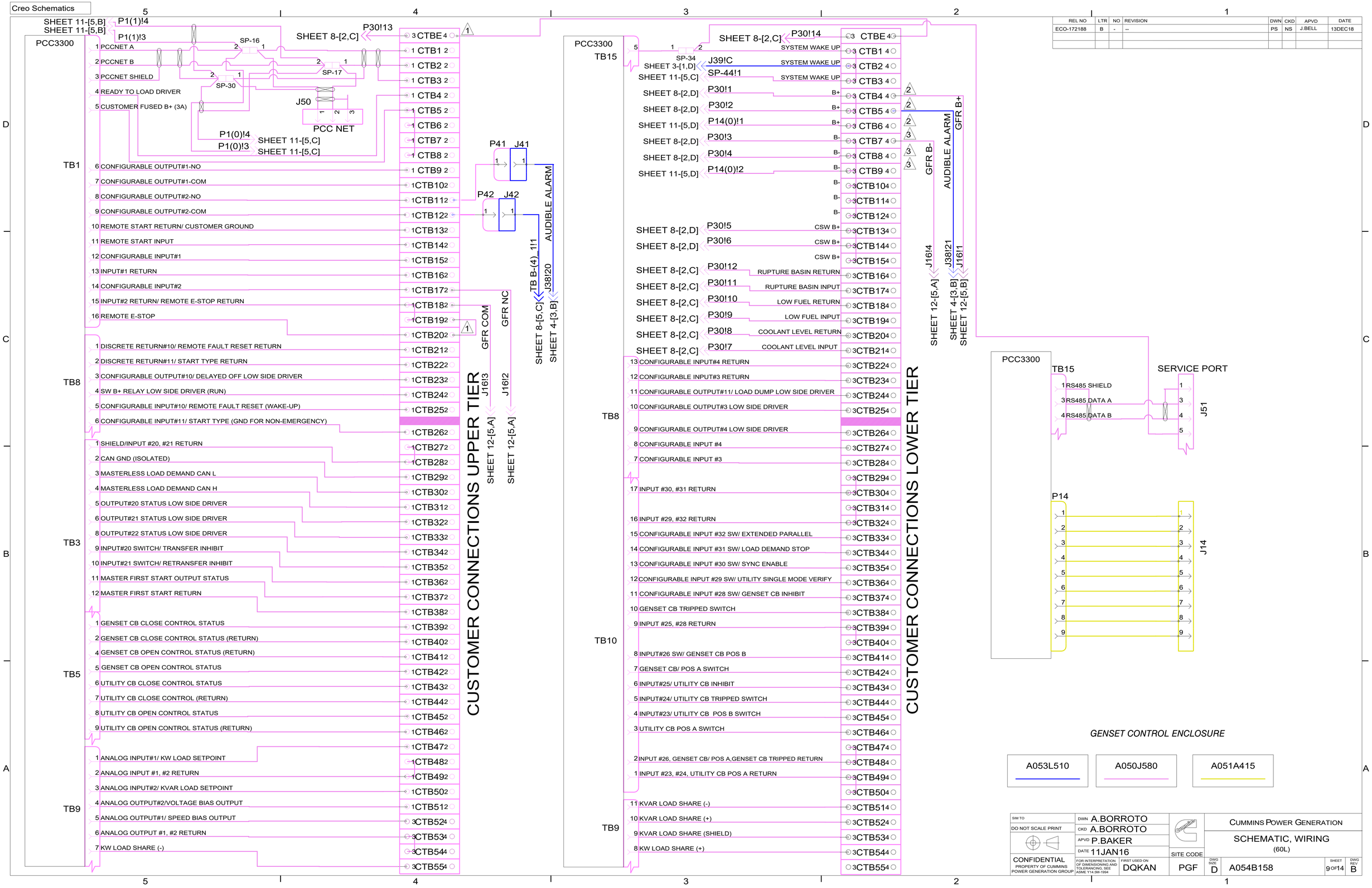

SIM TO	DWN A.BORROTO		CUMMINS POWER GENERATION
DO NOT SCALE PRINT	CKD A.BORROTO		SCHEMATIC, WIRING (60L)
	APVD P.BAKER		
	DATE 11JAN16	SITE CODE	
CONFIDENTIAL PROPERTY OF CUMMINS POWER GENERATION GROUP	FOR INTERPRETATION OF DIMENSIONING AND TOLERANCING, SEE ASME Y14.5M-1994 / FIRST USED ON DQKAN	PGF	DWG SIZE D / A054B158 / SHEET 9 OF 14 / DWG REV B

Drawing Name: A054B160 Revision: B
Part Name: A054B158 Revision: B
ECO-172188 Sheet 9 of 15

Creo Schematics

REL NO	LTR	NO	REVISION	DWN	CKD	APVD	DATE
ECO-172188	B	-	--	PS	NS	J.BELL	13DEC18

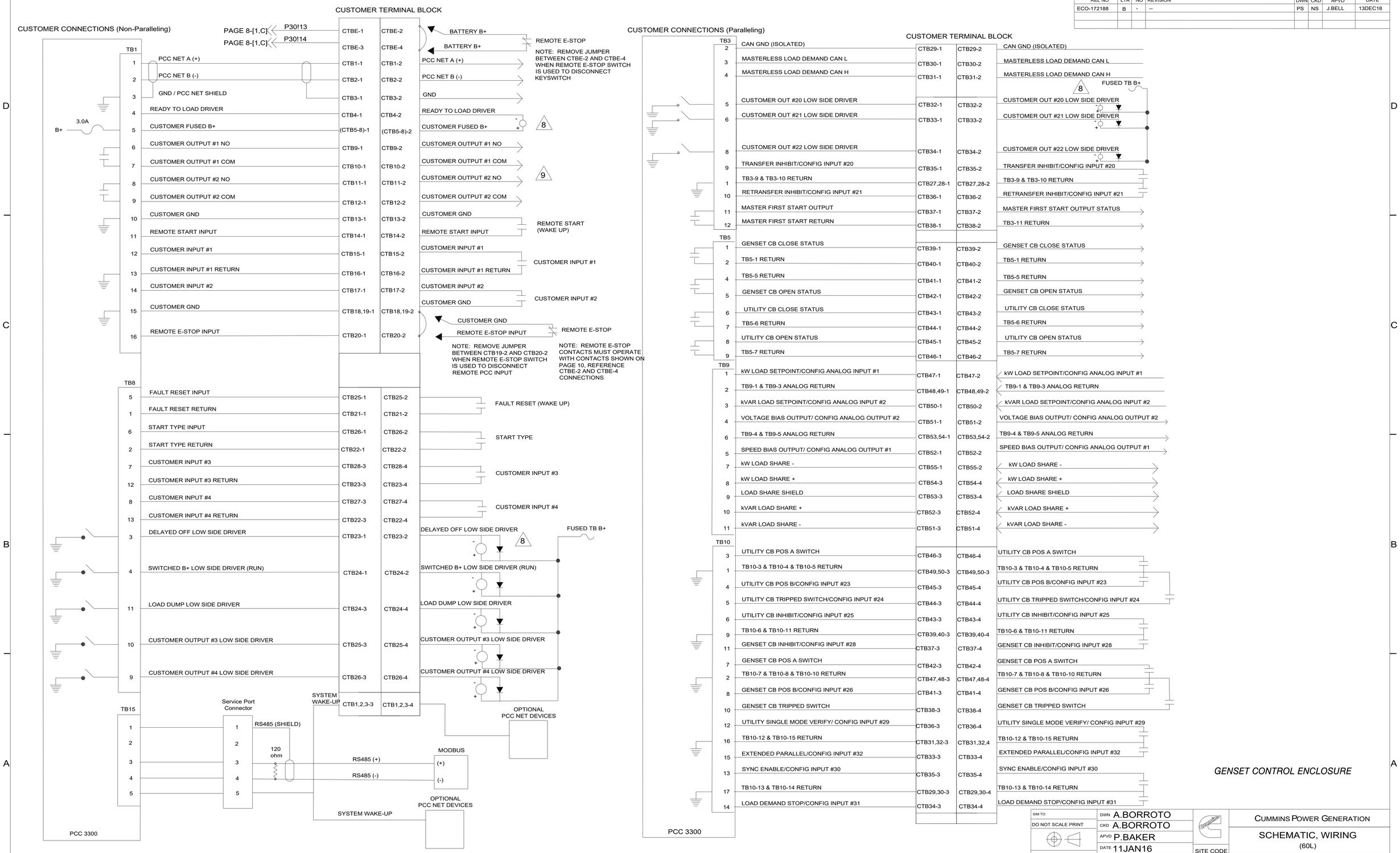

SIM TO	DWN A.BORROTO	CUMMINS POWER GENERATION	
DO NOT SCALE PRINT	CKD A.BORROTO	SCHEMATIC, WIRING (60L)	
	APVD P.BAKER		
	DATE 11JAN16	SITE CODE	
CONFIDENTIAL PROPERTY OF CUMMINS POWER GENERATION GROUP	FOR INTERPRETATION OF DIMENSIONING AND TOLERANCING, SEE ASME Y14.5M-1994	FIRST USED ON DQKAN	PGF

DWG SIZE D | A054B158 | SHEET 10 of 14 | DWG REV B

Creo Schematics

REL NO	LTR	NO	REVISION	DWN	CKD	APVD	DATE
ECO-172188	B	-	--	PS	NS	J.BELL	13DEC18

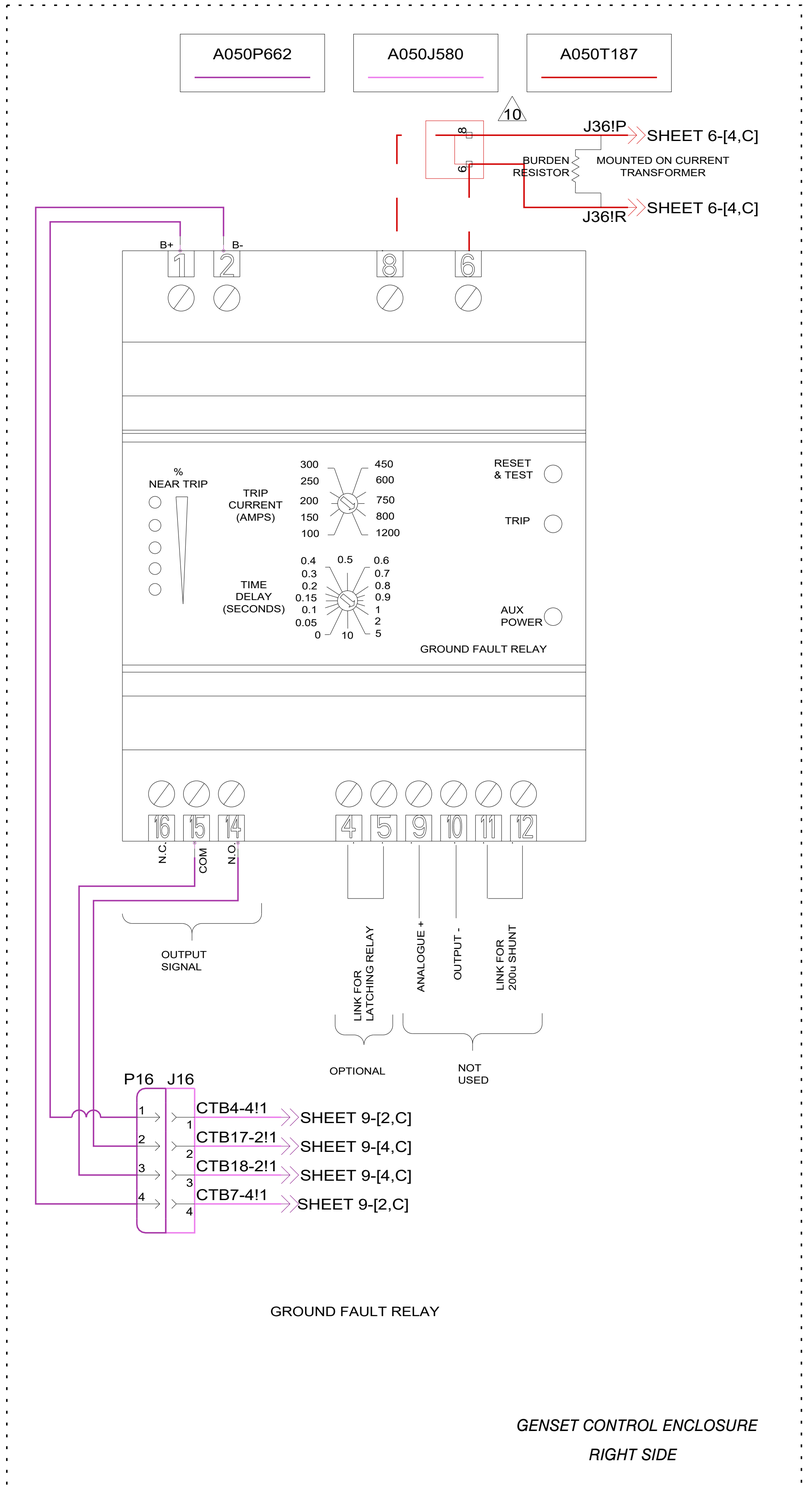

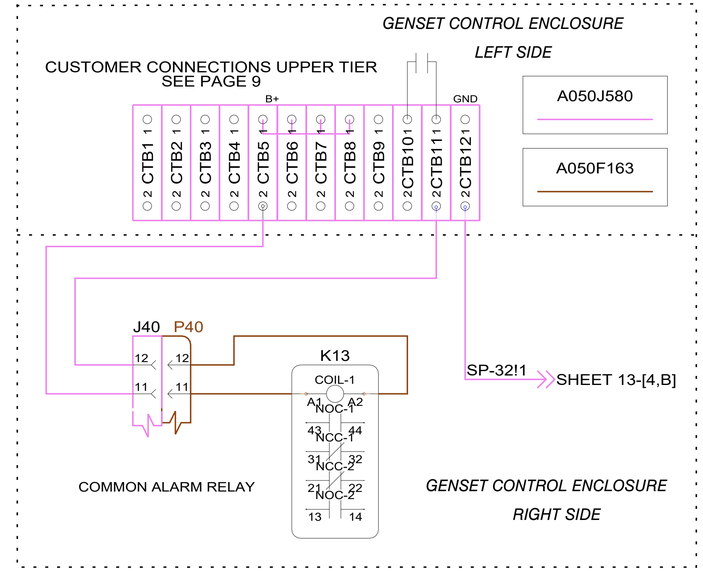

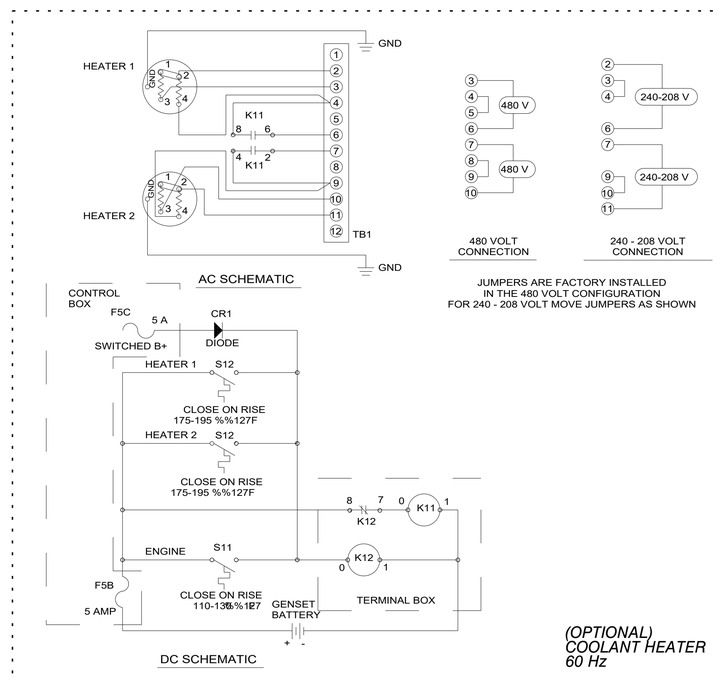

SIM TO	DWN A.BORROTO		CUMMINS POWER GENERATION
DO NOT SCALE PRINT	CKD A.BORROTO		SCHEMATIC, WIRING (60L)
	APVD P.BAKER		
	DATE 11JAN16	SITE CODE	
CONFIDENTIAL PROPERTY OF CUMMINS POWER GENERATION GROUP	FOR INTERPRETATION OF DIMENSIONING AND TOLERANCING, SEE ASME Y14.5M-1994 / FIRST USED ON DQKAN	PGF	DWG SIZE D / A054B158 / SHEET 12 OF 14 / DWG REV B

Creo Schematics

REL NO	LTR	NO	REVISION	DWN	CKD	APVD	DATE
ECO-172188	B	-	--	PS	NS	J.BELL	13DEC18

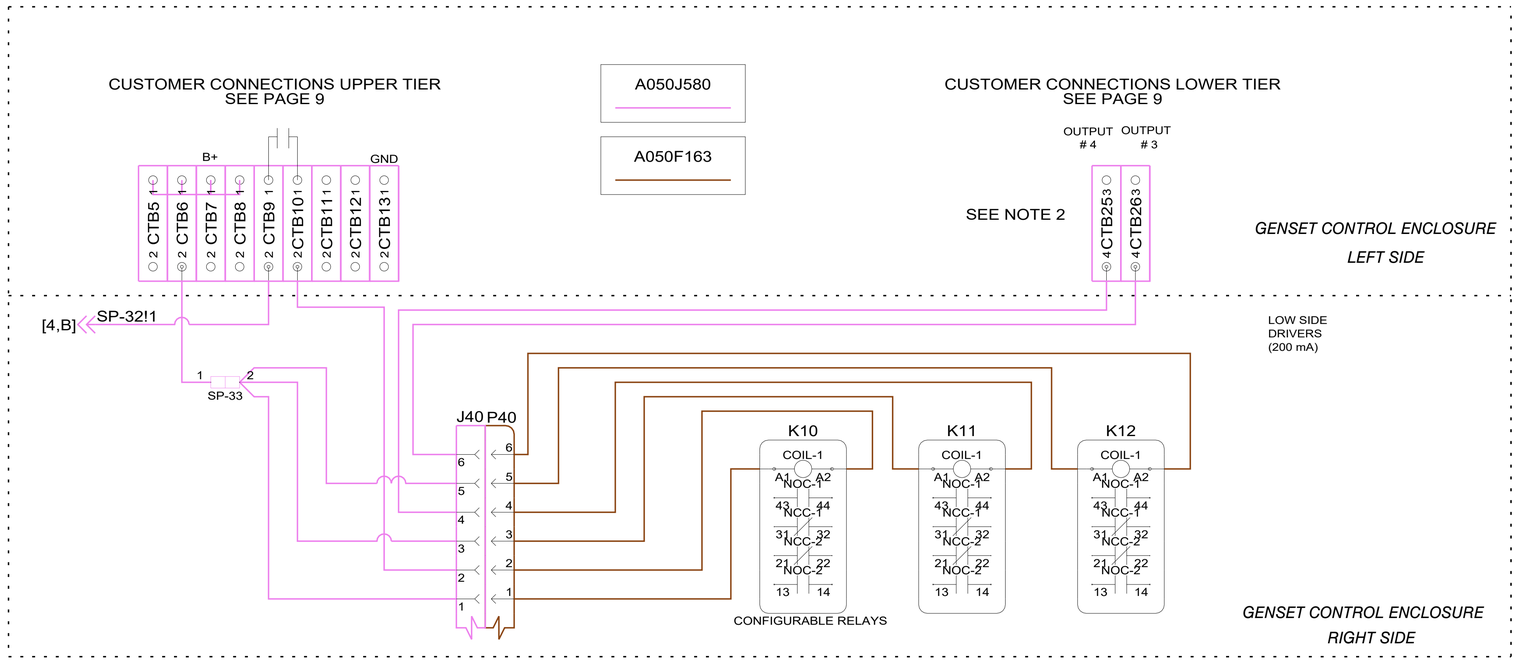

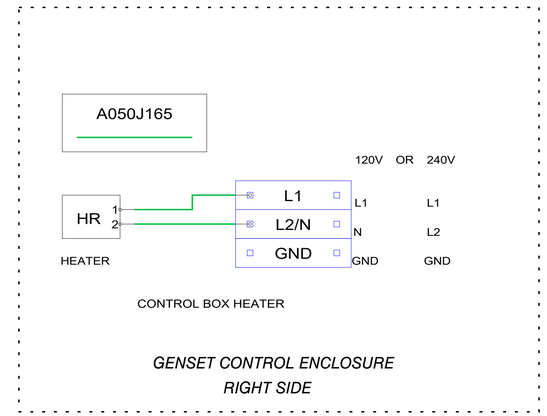

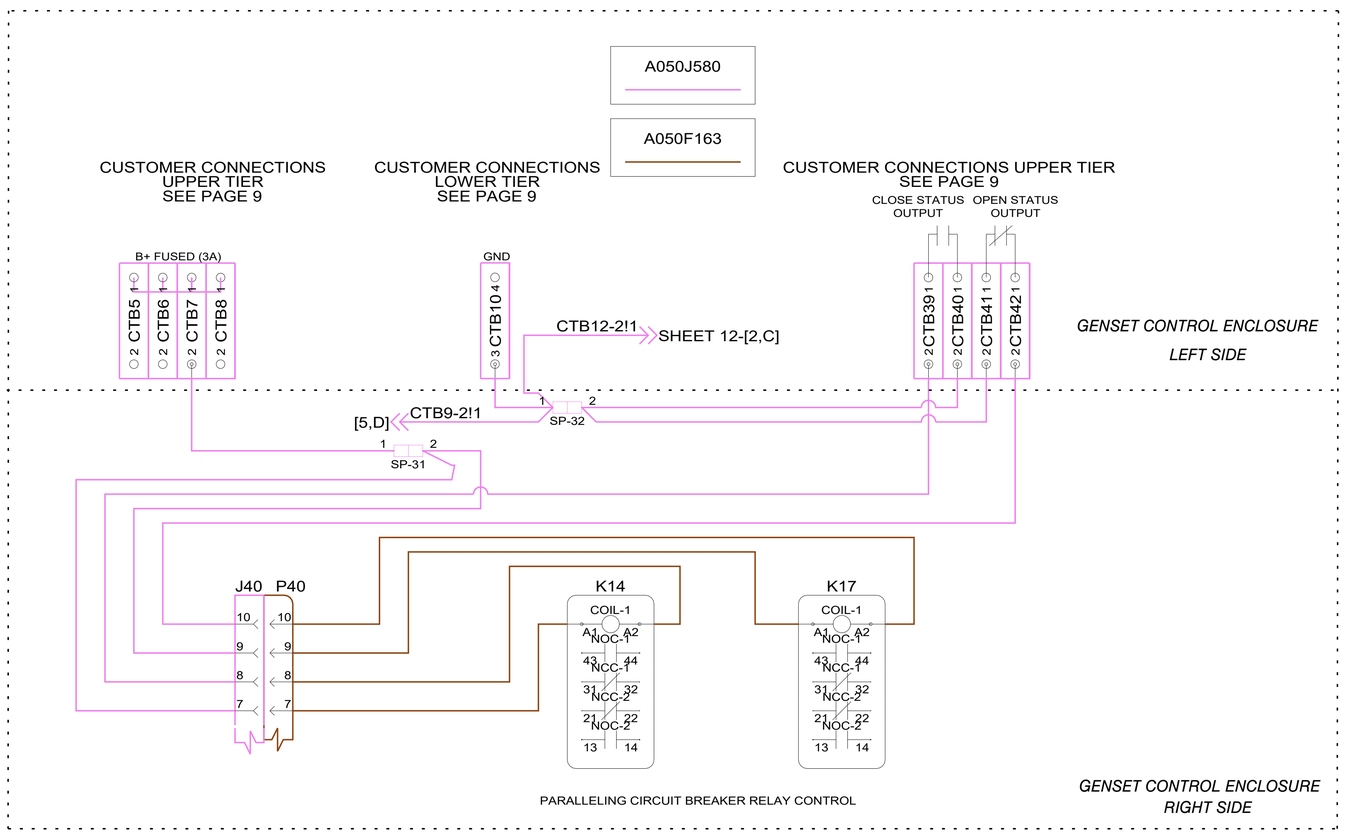

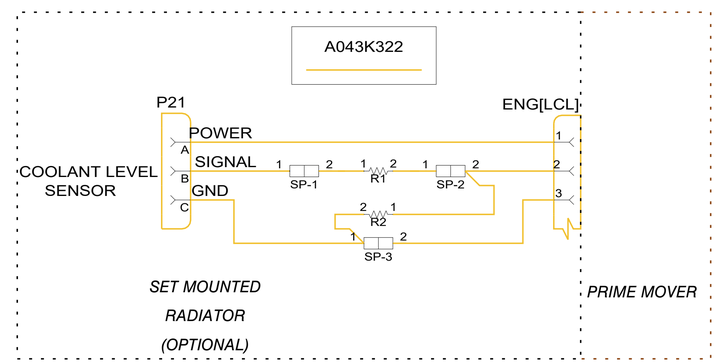

SIM TO	DWN A.BORROTO		CUMMINS POWER GENERATION
DO NOT SCALE PRINT	CKD A.BORROTO		SCHEMATIC, WIRING (60L)
	APVD P.BAKER		
	DATE 11JAN16	SITE CODE	
CONFIDENTIAL PROPERTY OF CUMMINS POWER GENERATION GROUP	FOR INTERPRETATION OF DIMENSIONING AND TOLERANCING, SEE ASME Y14.5M-1994 / FIRST USED ON DQKAN	PGF	DWG SIZE D / A054B158 / SHEET 13 OF 14 / DWG REV B

Drawing Name: A054B160 Revision: B
Part Name: A054B158 Revision: B
ECO-172188 Sheet 13 of 15

SECTION 5
START-UP AND WARRANTY

Cummins Sales and Service

Customer / Contractor Pre Commissioning Inspection Form

The intent of this form is for the contractor to prepare for equipment to be commissioned by a certified Cummins Field Service Power Generation Technician. Filling out this form is required and will minimize delays due to equipment failing to meet requirements. Completing this checklist in its entirety should minimize the need for additional billing beyond the previously provided commissioning quote.

The items listed are the responsibility of the contractor and not Cummins Sales and Service.

Project Name/End User: _____

Contractor: _____

Address: _____ **Contact:** _____

Business Phone: _____ **Cell Phone:**_____

Email: _____

ON SITE INFORMATION

On-Site Contact Information: _____

Address: _____

Time Requested Onsite: _____

Sub location of Generator (ie. Roof, basement, floor): _____

Does the facility have the following: Loading Dock ☐ Elevator ☐

Access (from truck and load bank parking to generator in feet): _____

Parking: Is parking available on-site for service truck: Yes ☐ No ☐

Permits: Have all necessary air quality and local permits been secured: Yes ☐ No ☐ N/A ☐

Fuel Tank Testing: Is fuel tank testing required: Yes ☐ No ☐

If yes when is the inspector scheduled for: _____

Sales and Service

ON SITE INFORMATION CONTINUED

YES	NA	NO	
☐	☐	☐	Is the facility occupied and is customer aware there will be power outages after generator is started?
☐	☐	☐	Will there be any site safety training needed for technician prior to beginning? On site contact for training: _____
☐	☐	☐	Will customer representative be on site for operator training? On site contact for operator training: _____

MECHANICAL LOCATION AND PLACEMENT OF THE GENERATOR SET

YES	NA	NO	
☐	☐	☐	Generator is properly secured to pad or vibration isolators
☐	☐	☐	Generator Enclosure and/or Room is free of all debris
☐	☐	☐	No airflow obstructions to the engine or generator are present for cooling combustion (See Cummins T-030 or Installation manual of generator set)
☐	☐	☐	Room is designed for adequate inlet and outlet airflow

GASEOUS FUEL Natural Gas/LP Vapor/LP Liquid

YES	NA	NO	
☐	☐	☐	Natural gas and/or LPG fuel supply is connected.
☐	☐	☐	Fuel piping is the appropriate size based on full-load CFH/BTU requirement. Pipe size after service regulator: _____
☐	☐	☐	Service regulator(s), (if supplied), fuel strainer(s), flexible fuel line(s) and manual shut off are installed
☐	☐	☐	Fuel pressure after service regulator is:_____inches of H2O

I have read and fully understand the fuel requirements for this equipment, I am verifying that the piping and fuel supply meets or exceeds those requirements. I also understand failure to meet the requirements will result in additional charges.

_____ _____

Contractor "requestor" Signature ***Date***

DIESEL FUELED GENERATORS

YES	NA	NO	
☐	☐	☐	Flexible fuel connections, (supply and return) are connected to generator and piping.
☐	☐	☐	Day tank installed, wired and plumbed (lines free of obstruction) to genset and main fuel tank if applicable. Only black iron pipe for fuel lines, never use copper or galvanized pipe.
☐	☐	☐	All tanks filled with enough fuel to perform startup and testing.
☐	☐	☐	A return line from engine to day tank and day tank to main tank should be in place

EXHAUST SYSTEM

YES	NA	NO	
☐	☐	☐	Exhaust wrapped or isolated to prevent accidental activation of fire protection devices and sprinklers.
☐	☐	☐	Exhaust flex-pipe is installed at engine exhaust outlet (The silencer and flex-pipe are supplied with the generator set).
☐	☐	☐	Silencer is installed with appropriate supports (no weight should be placed on the exhaust outlet of the genset).
☐	☐	☐	Exhaust system has proper expansion joints and wall thimbles (Thimbles are required for wall or roof penetration).

GENERATOR ELECTRICAL CONNECTIONS

YES	NA	NO	
☐	☐	☐	Load conductors connected to breakers
☐	☐	☐	Flexible connections used on all conduit connections to the generator set output box
☐	☐	☐	Remote start interconnection **stranded** wiring is installed between the generator set and the automatic transfer switch(s) and annunciator.
☐	☐	☐	AC Power conductors in dedicated conduit separate from any DC control or network wiring
☐	☐	☐	Ground fault connected/functioning on generator, if supplied
☐	☐	☐	AC power wired to the coolant heaters (Do NOT energize)
☐	☐	☐	Check for AC oil pan heater, control heater or generator winding heater (Needing AC wiring)
☐	☐	☐	Generator is grounded in compliance with local codes
☐	☐	☐	If applicable, louver motors are operational and connected to generator controls

Sales and Service

GENERATOR ELECTRICAL CONNECTIONS CONTINUED

YES	NA	NO	
☐	☐	☐	Annunciator mounted in a location where someone can observe a fault of the remote generator system Where is annunciator located? _____
☐	☐	☐	Are there additional ancillary devices/equipment that need to be integrated into the system? If yes, please define_____
☐	☐	☐	Battery charger mounted (free of vibration, weather, accessible for an operator to observe easily) and connected to the appropriate AC and DC wiring to operate the charger.

TRANSFER SWITCH ELECTRICAL CONNECTIONS

YES	NA	NO	
☐	☐	☐	Conductors connected for Utility, Load and Emergency
☐	☐	☐	Remote start interconnection **stranded** wiring is installed between the generator set and the automatic transfer switch(s).
☐	☐	☐	Four Pole Transfer Switch: Is generator neutral grounded? ☐

DAY OF STARTUP

YES	NA	NO	
☐	☐	☐	Training of facility personnel will be done on the same day as start up. Additional trips for operational training will be an additional charge.
☐	☐	☐	Can transfer switch be tested at time of generator startup? (There will be a power interruption) ***Note: After hours testing could result in additional charges.***
☐	☐	☐	If the associated switchgear and/or ATS(s) are not provided by Cummins, will the manufacturer's representative be on site?

Exercise with or without load? ☐

If known, Transfer Time delay set recommendations Generator Set to exercise Day:_____ Time:_____

_____ _____

Contractor "requestor" Signature ***Printed Name***

Date: _____

Please complete this form and return to schedule start up, if not returned within 5 business days prior to scheduled startup it may be delayed. I understand that the start-up date may have to be rescheduled at my expense if the above items have not been completed properly.

INSTRUCTION OF OPERATIONS AND MAINTENANCE
Generator

Training will be conducted by a factory-trained maintenance specialist in transfer switches. Training duration will be approximately 1 hour with a question-and-answer session to last as long as needed to satisfy the owner.

LESSON PLAN

I. Safety
   a. General safety precautions
   b. Equipment safety code
   c. Electrical shock and arc flash

II. Equipment operation
   a. Engine/generator operation process
   b. Fundamental operating principals of the engine/generator
   c. Identification of all equipment components – mechanical, electrical, and electronic
   d. Standard operating procedures – start-up, monitoring, shutdown, and E-stop reset

III. Component description
   a. Identify each component's function – engine/generator and automatic transfer switch – and their relationship to one another, if applicable

IV. Preventative maintenance
   a. Inspection procedures
      i. Inspection with equipment in operation
      ii. Potential trouble symptoms
   b. Procedures for testing equipment after maintenance has been performed

V. Equipment troubleshooting
   a. Alarms / display messages
   b. Procedures
   c. Symptom list
   d. Probable cause and recommended correction
   e. How to obtain service

"HANDS-ON" DEMONSTRATION
The instructor will demonstrate the engine/generator functionality in auto and manual modes.

Disclaimer
Training is for informational purposes only. If you have any specific safety or operational questions refer to the Operators Manual and/or Sequence of Operations documentation.

Warranty Statement

Global Commercial Warranty Statement

Generator Set

English
Original Instructions

7-2017

A028U870 (Issue 5)

Our energy working for you.™

Power Generation

Limited Warranty

Commercial Generating Set

This limited warranty applies to all Cummins Power Generation® branded commercial generating sets and associated accessories (hereinafter referred to as "Product").

This warranty covers any failures of the Product, under normal use and service, which result from a defect in material or factory workmanship.

Warranty Period:

The warranty start date† is the date of initial start up, first rental, demonstration or 18 months after factory ship date, whichever is sooner. See table for details.

Continuous Power (COP) is defined as being the maximum power which the generating set is capable of delivering continuously whilst supplying a constant electrical load when operated for an unlimited number of hours per year. No overload capability is available for this rating.

Prime Power (PRP) is defined as being the maximum power which a generating set is capable of delivering continuously whilst supplying a variable electrical load when operated for an unlimited number of hours per year. The permissible average power output over 24 hours of operation shall not exceed 70% of the PRP. For applications requiring permissible average output higher than stated, a COP rating should be used.

Limited-Time Running Power (LTP) is defined as the maximum power available, under the agreed operating conditions, for which the generating set is capable of delivering for up to 500 hours of operation per year.

Emergency Standby Power (ESP) is defined as the maximum power available during a variable electrical power sequence, under the stated operating conditions, for which a generating set is capable of delivering in the event of a utility power outage or under test conditions for up to 500 hours of operation per year. The permissible average power output over 24 hours of operation shall not exceed 70% of the ESP.

Environmental Protection Agency – Stationary Emergency (EPA-SE) is defined as being the maximum power available during a variable electrical power sequence, under the stated operating conditions, for which a generator set is capable of delivering in the event of a utility power outage or under test conditions and used in strict accordance with the EPA NSPS for stationary engines, 40 CFR part 60, subparts IIII and JJJJ, where a reliable utility must be present. The permissible average power output over 24 hours of operation shall not exceed 70% of the EPA-SE.

Data Center Continuous (DCC) is defined as the maximum power which the generator is capable of delivering continuously to a constant or varying electrical load for unlimited hours in a data center application.

Base Warranty Coverage Duration (Whichever occurs first)

Rating	Months	Max. Hours
COP	12	Unlimited
PRP	12	Unlimited
LTP	12	500 hrs
ESP	24	1000 hrs
EPA-SE	24	Unlimited
DCC	24	Unlimited

† Warranty start date for designated rental and oil and gas model Products is determined to be date of receipt of Product by the end customer.

Cummins Power Generation® Responsibilities:

In the event of a failure of the Product during the warranty period due to defects in material or workmanship, Cummins Power Generation® will only be responsible for the following costs:

- All parts and labor required to repair the Product.
- Reasonable travel expenses to and from the Product site location.
- Maintenance items that are contaminated or damaged by a warrantable failure.

Owner Responsibilities:

The owner will be responsible for the following:

- Notifying Cummins Power Generation® distributor or dealer within 30 days of the discovery of failure.
- Installing, operating, commissioning and maintaining the Product in accordance with Cummins Power Generation®'s published policies and guidelines.
- Providing evidence for date of commissioning.
- Providing sufficient access to and reasonable ability to remove the Product from the installation in the event of a warrantable failure.
- Incremental costs and expenses associated with Product removal and reinstallation resulting from non-standard installations.
- Costs associated with rental of generating sets used to replace the Product being repaired.
- Costs associated with labor overtime and premium shipping requested by the owner.
- All downtime expenses, fines, all applicable taxes, and other losses resulting from a warrantable failure.

Limitations:

This limited warranty does not cover Product failures resulting from:

- Inappropriate use relative to designated power rating.
- Inappropriate use relative to application guidelines.
- Inappropriate use of an EPA-SE application generator set relative to EPA's standards.
- Normal wear and tear.
- Improper and/or unauthorized installation.
- Negligence, accidents or misuse.
- Lack of maintenance or unauthorized repair.
- Noncompliance with any Cummins Power Generation® published guideline or policy.
- Use of improper or contaminated fuels, coolants or lubricants.
- Improper storage before and after commissioning.
- Owner's delay in making Product available after notification of potential Product problem.
- Replacement parts and accessories not authorized by Cummins Power Generation®.
- Use of Battle Short Mode.
- Owner or operator abuse or neglect such as: operation without adequate coolant or lubricants; overfueling; overspeeding; lack of maintenance to lubricating, cooling or air intake systems; late servicing and maintenance; improper storage, starting, warm-up, run-in or shutdown practices, or for progressive damage resulting from a defective shutdown or warning device.
- Damage to parts, fixtures, housings, attachments and accessory items that are not part of the generating set.

This limited warranty does not cover costs resulting from:

- Difficulty in gaining access to the Product.
- Damage to customer property.

A "Data center" is defined as a dedicated facility that house computers and associated equipment for data storage and data handling.

Reliable utility is defined as utility power without routine or regularly scheduled black-outs.

Please contact your local Cummins Power Generation® Distributor for clarification concerning these limitations.

CUMMINS POWER GENERATION® RIGHT TO FAILED COMPONENTS:

Failed components claimed under warranty remain the property of Cummins Power Generation®. Cummins Power Generation® has the right to reclaim any failed component that has been replaced under warranty.

Extended Warranty:

Cummins Power Generation® offers several levels of Extended Warranty Coverage. Please contact your local Cummins Power Generation ® Distributor for details.
www.power.cummins.com

THE WARRANTIES SET FORTH HEREIN ARE THE SOLE WARRANTIES MADE BY CUMMINS POWER GENERATION ® IN REGARD TO THE PRODUCT. CUMMINS POWER GENERATION® MAKES NO OTHER WARRANTIES, EXPRESS OR IMPLIED, OR OF MERCHANTABILITY OR FITNESS FOR A PARTICULAR PURPOSE.

IN NO EVENT IS CUMMINS POWER GENERATION® LIABLE FOR INCIDENTAL OR CONSEQUENTIAL DAMAGES.

This limited warranty shall be enforced to the maximum extent permitted by applicable law. This limited warranty gives the owner specific rights that may vary from state to state or from jurisdiction to jurisdiction.